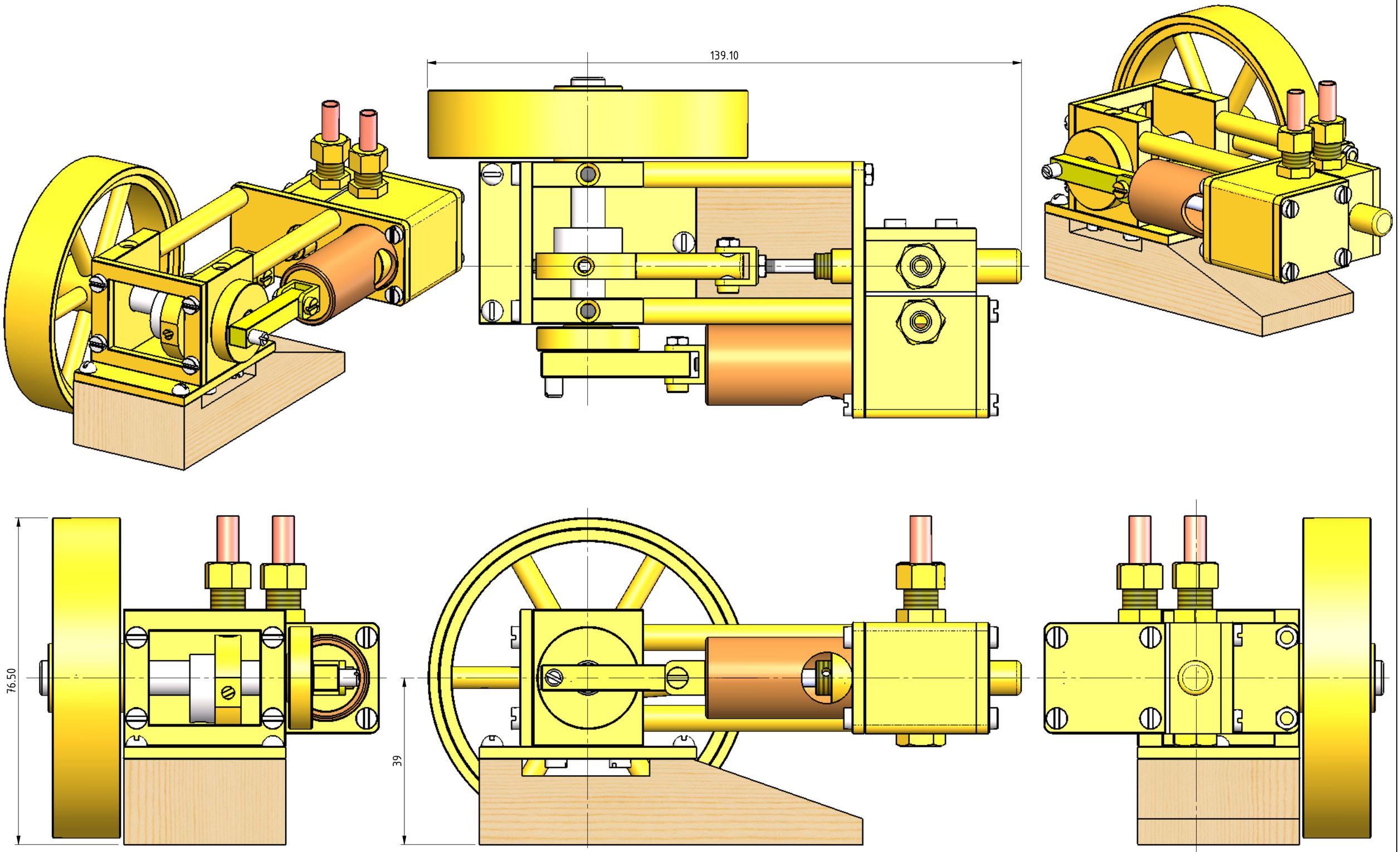

TITLE

SINGLE CYLINDER HORIZONTAL STEAM ENGINE WITH SLIDE VALVE GENERAL ARRANGEMENT

PLEASE NOTE THIS STEAM ENGINE WAS DESIGNED AND BUILT BY MR. G.P. QUAYLE OF AUCKLAND NEW ZEALAND

REV	DESCRIPTION	DATE
A	ISSUED FOR CONSTRUCTION	09/2007

JDW DRAUGHTING SERVICES
12 BRIGHTWELL STREET
PAPAKURA NEW ZEALAND
TEL/FAX 0064-09-2988815
E-MAIL:dewaal@xtra.co.nz

DRAWN BY	PROJECTION	DRAWING NUMBER	
J.A.M. DE WAAL		SCSE-00	
DATE	SCALE	CAD FILE	REV
APRIL 2006	AS SHOWN		A

REMOVE SHARP EDGES AND DEBUR HOLES

IF IN DOUBT ASK :

NOTE: WHERE NOT INDICATED CHAMFERS ARE 0.2x45

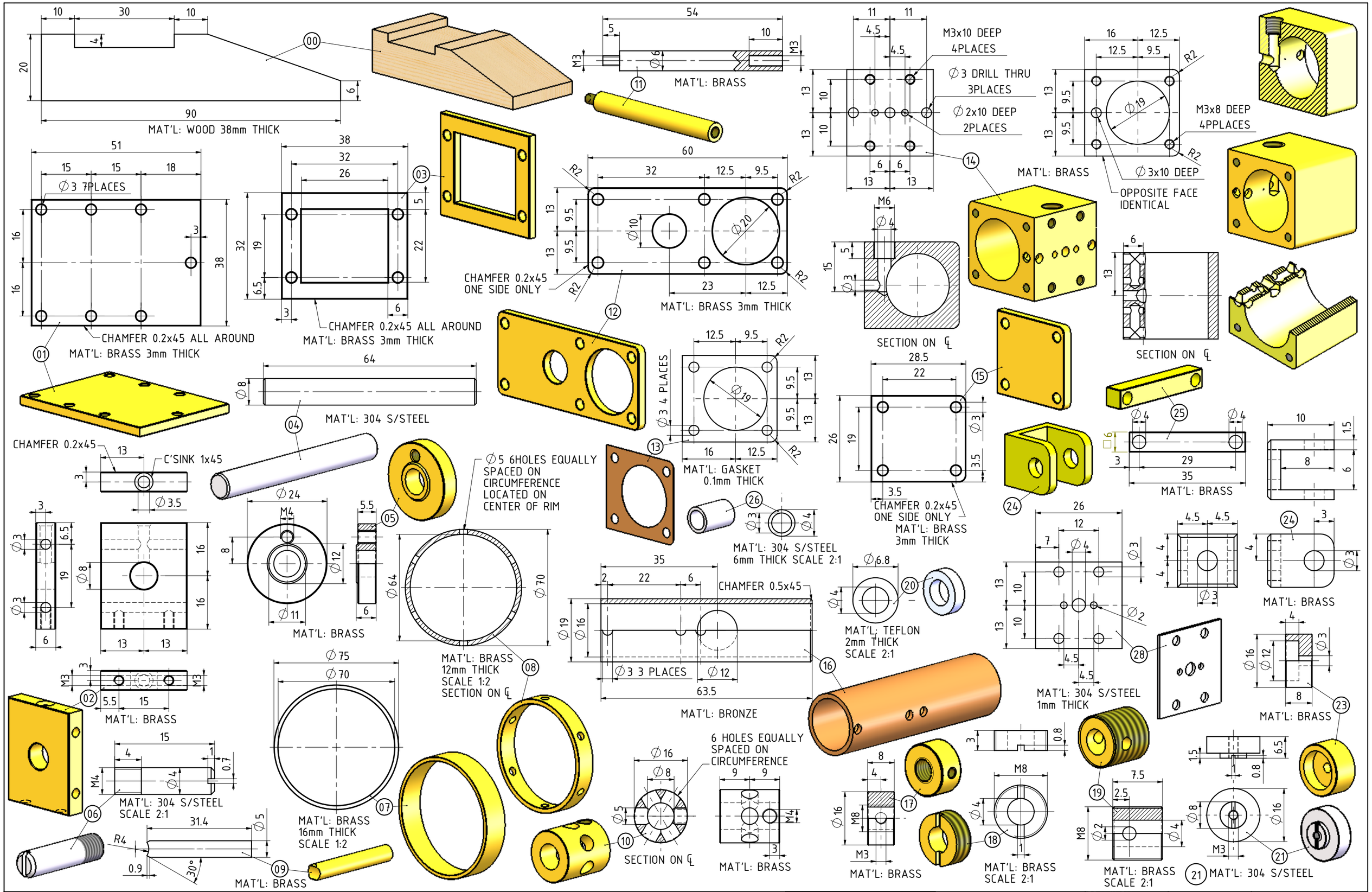

TITLE

SINGLE CYLINDER HORIZONTAL STEAM ENGINE WITH SLIDE VALVE ASSMBLIES AND PARTS

PLEASE NOTE THIS STEAM ENGINE WAS DESIGNED AND BUILT BY MR. G.P. QUAYLE OF AUCKLAND NEW ZEALAND

REV	DESCRIPTION	DATE
A	ISSUED FOR CONSTRUCTION	09/2007

JDW DRAUGHTING SERVICES
12 BRIGHTWELL STREET
PAPAKURA NEW ZEALAND
TEL/FAX 0064-09-2988815
E-MAIL:dewaal@xtra.co.nz

DRAWN BY	PROJECTION	DRAWING NUMBER
J.A.M. DE WAAL		SCSE-01
DATE	SCALE	CAD FILE	REV
SEPT 2006	1:1 @A3 OR AS STATED		A

REMOVE SHARP EDGES AND DEBUR HOLES

IF IN DOUBT ASK :

NOTE: WHERE NOT INDICATED CHAMFERS ARE 0.2x45

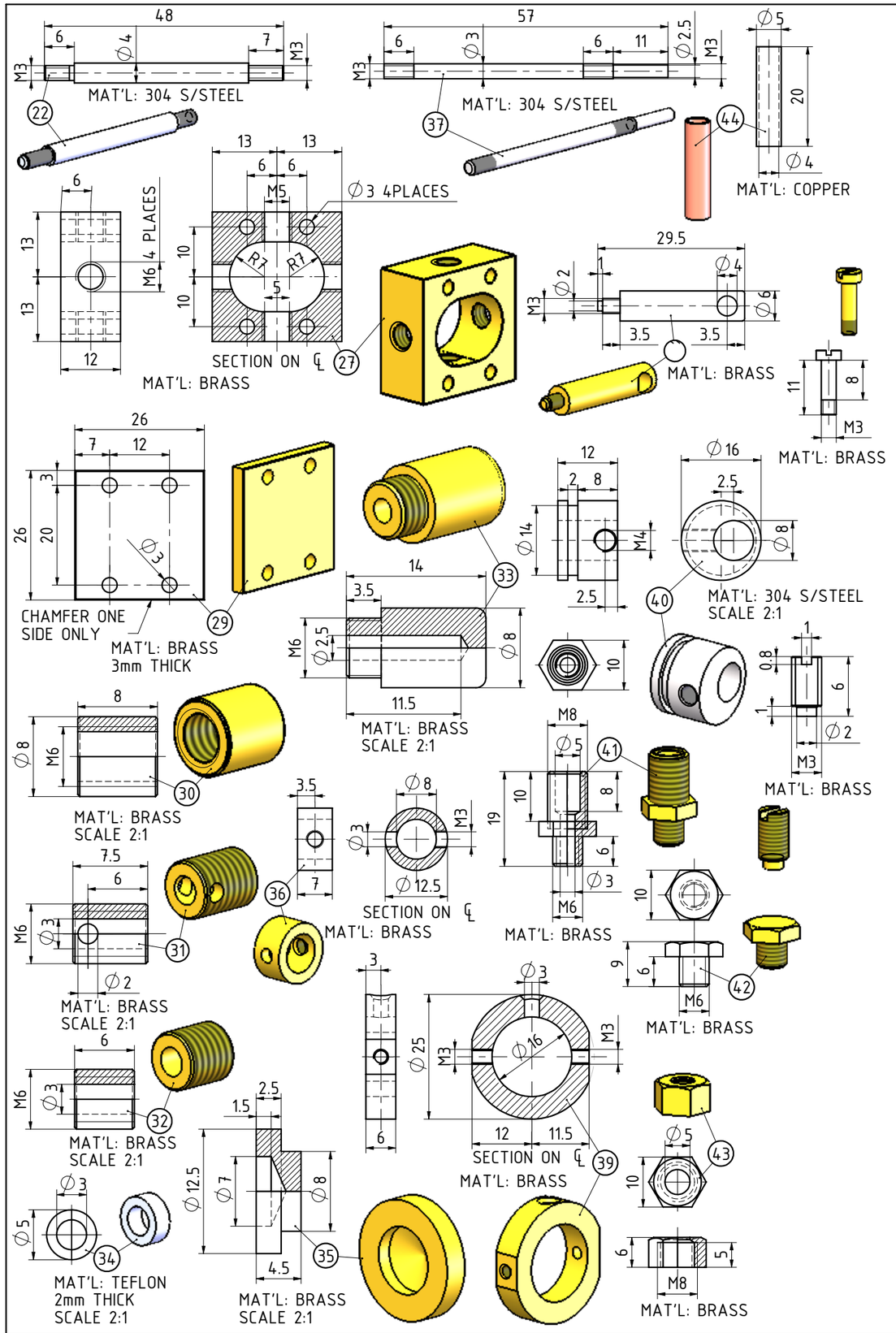

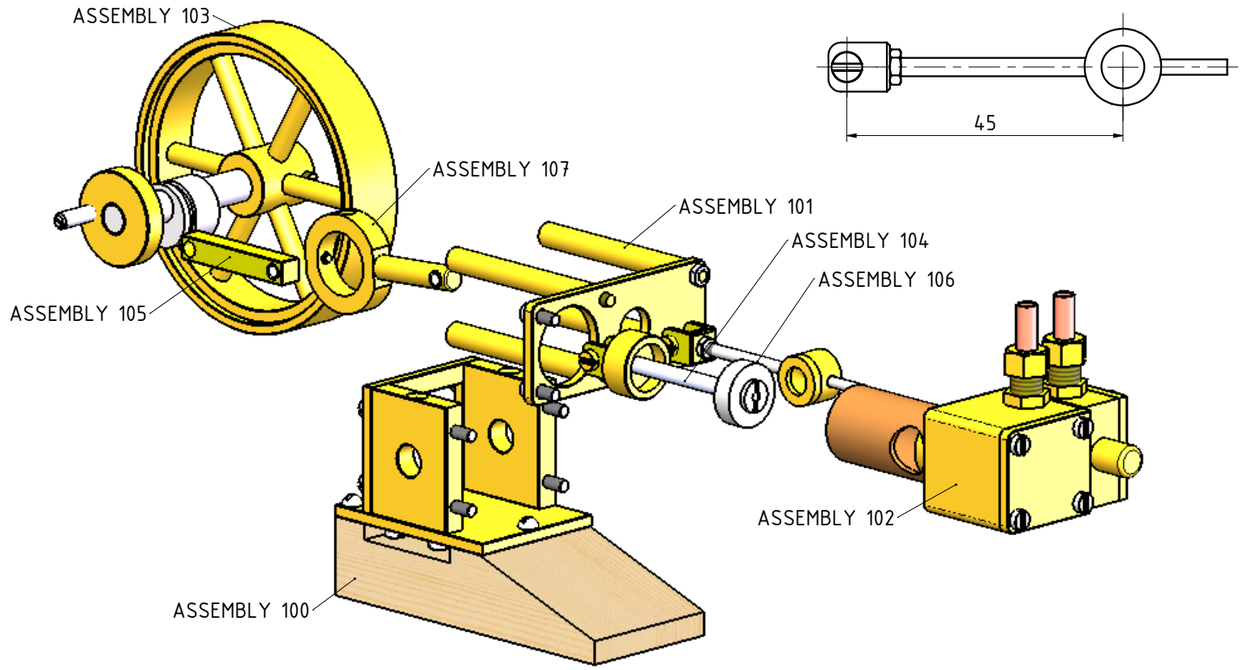

ITEM	DESCRIPTION	MATERIAL	OMSCHRIJVING	MATRIAAL
00	BASE BLOCK	WOOD	BASIS BLOK	HOUT
01	BASE PLATE	BRASS	BASIS PLAAT	MESSING
02	SIDE PLATE	BRASS	ZIJ PLAAT	MESSING
03	BACK PLATE	BRASS	ACHTER PLAAT	MESSING
04	CRANK SHAFT	SILVER STEEL	KRUK AS	SIL VERSTAAL
05	CRANK DISK	BRASS	KRUK PLAAT	MESSING
06	CRANK PIN	SILVER STEEL	KRUK PEN	ZILVER STAAL
07	FLYWHEEL OUTER RING	BRASS	VLIEGWIEL BUITEN RING	MESSING
08	FLYWHEEL INNER RING	BRASS	VLIEGWIEL BINNEN RING	MESSING
09	FLYWHEEL SPOKE	BRASS	VLIEGWIEL SPAAK	MESSING
10	FLYWHEEL HUB	BRASS	VLIEGWIEL CENTER	MESSING
11	COLUMN	BRASS	PILLAAR	MESSING
12	CYLINDER HOLDING PLATE	BRASS	CILINDER HOUDER	MESSING
13	CYLINDER GASKET	NEOPRENE	CILINDER PAKKING	NEOPREEN
14	CYLINDER BLOCK	BRASS	CILINDER BLOK	MESSING
15	CYLINDER BLOCK COVER	BRASS	CILINDER BLOK DEKSEL	MESSING
16	CYLINDER TRUNK GUIDE	BRONZE	CILINDER HOOFD GELEIDER	BRONS
17	PISTON GLAND BUSH	BRASS	ZUIGERSTANG GELEIDER LAGER	MESSING
18	PISTON GLAND PLUG	BRASS	ZUIGERSTANG GELEIDER AFSLUITER	MESSING
19	PISTON GLAND NUT	BRASS	ZUIGERSTANG GELEIDER MOER	MESSING
20	PISTON GLAND SEAL	TEFLON	ZUIGERSTANG AFDICHTINGS RING	TEFLON
21	PISTON	SILVER STEEL	ZUIGER	ZILVER STAAL
22	PISTON ROD	SILVER STEEL	ZUIGER STANG	ZILVER STAAL
23	TRUNK GUIDE	BRASS	HOOFD GELEIDER	MESSING
24	YOKE	BRASS	JUK	MESSING
25	CON ROD	BRASS	AANSLUIT STANG	MESSING
26	BEARING BUSH	SILVER STEEL	LAGER BUS	ZILVER STAAL
27	VALVE CHAMBER	BRASS	SCHUIF KAST	MESSING
28	VALVE CHAMBER GASKET	S/STEEL	SCHUIF KAST PAKKING	ROESTVRIJSTAAL
29	VALVE CHAMBER COVER	BRASS	SCHUIF KAST DEKSEL	MESSING
30	VALVE GLAND BUSH	BRASS	SCHUIFSTANG GELEIDER LAGER	MESSING
31	VALVE GLAND NUT	BRASS	SCHUIFSTANG GELEIDER MOER	MESSING
32	VALVE GLAND NIPPLE	BRASS	SCHUIFSTANG GELEIDER NIPPEL	MESSING
33	VALVE CHAMBER DOME	BRASS	SCHUIF KAST KOEPEL	MESSING
34	VALVE GLAND SEAL	TEFLON	SCHUIF STANG GELEIDER AFDICTINGS RING	TEFLON
35	VALVE	BRASS	SHUIF	MESSING
36	VALVE RING	BRASS	SCHUIF RING	MESSING
37	VALVE ROD	SILVER STEEL	SCHUIFSTANG	ZILVER STAAL
38	EXCENTRIC ROD	BRASS	EXCENTRIEK STANG	MESSING
39	EXCENTRIC HOUSING	BRASS	EXCENTRIEK HUISING	MESSING
40	EXCENTRIC	SILVER STEEL	EXCENTRIEK	ZILVER STAAL
41	CONNECTOR	BRASS	KOPPELAAR	MESSING
42	PLUG	BRASS	AFSLUITER	MESSING
43	CONNECTOR NUT	BRASS	KOPPELAAR MOER	MESSING
44	INLET-OUTLET PIPE	COPPER	INLAAT-UITLAAT PIJP	KOPER

TITLE

SINGLE CYLINDER HORIZONTAL STEAM ENGINE WITH SLIDE VALVE ASSMBLIES AND PARTS

PLEASE NOTE THIS STEAM ENGINE WAS DESIGNED AND BUILT BY MR. G.P. QUAYLE OF AUCKLAND NEW ZEALAND

REV	DESCRIPTION	DATE
A	ISSUED FOR CONSTRUCTION	09/2007

JDW DRAUGHTING SERVICES
12 BRIGHTWELL STREET
PAPAKURA NEW ZEALAND
TEL/FAX 0064-09-2988815
E-MAIL:dewaal@xtra.co.nz

DRAWN BY	PROJECTION	DRAWING NUMBER
J.A.M. DE WAAL		SCSE-02
DATE: SEPT 2006	SCALE: 1:1 @A3 OR AS STATED	CAD FILE
		REV: A

REMOVE SHARP EDGES AND DEBUR HOLES

IF IN DOUBT ASK :

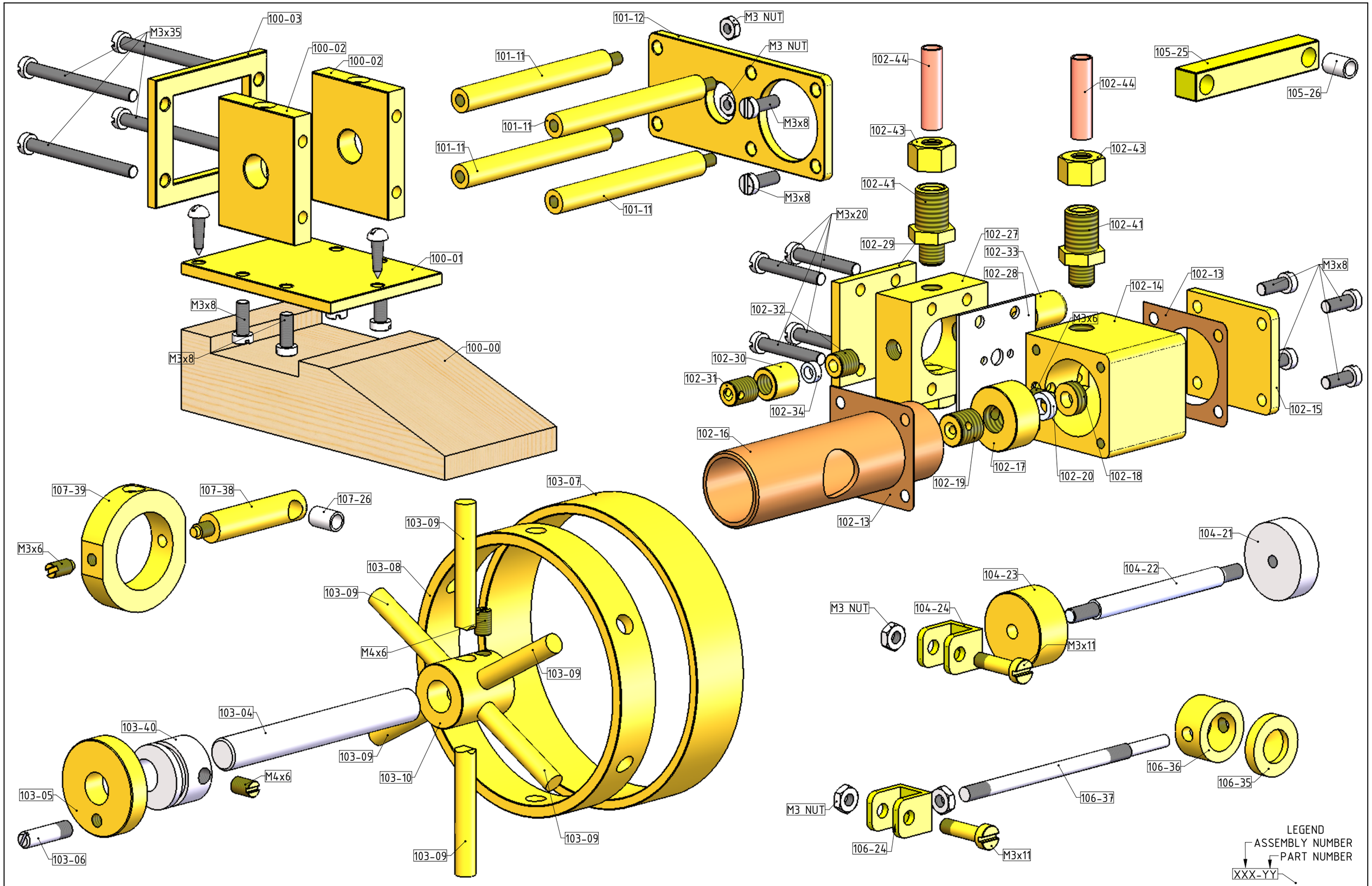

TITLE

SINGLE CYLINDER HORIZONTAL STEAM ENGINE WITH SLIDE VALVE ASSMBLIES AND PARTS

PLEASE NOTE THIS STEAM ENGINE WAS DESIGNED AND BUILT BY MR. G.P. QUAYLE OF AUCKLAND NEW ZEALAND

REV	DESCRIPTION	DATE
A	ISSUED FOR CONSTRUCTION	09/2007

JDW DRAUGHTING SERVICES
12 BRIGHTWELL STREET
PAPAKURA NEW ZEALAND
TEL/FAX 0064-09-2988815
E-MAIL:dewaal@xtra.co.nz

DRAWN BY	PROJECTION	DRAWING NUMBER
J.A.M. DE WAAL		SCSE-03
DATE: SEPT 2006	SCALE: 1:1 @A3 OR AS STATED	CAD FILE / REV: A

REMOVE SHARP EDGES AND DEBUR HOLES

IF IN DOUBT ASK :

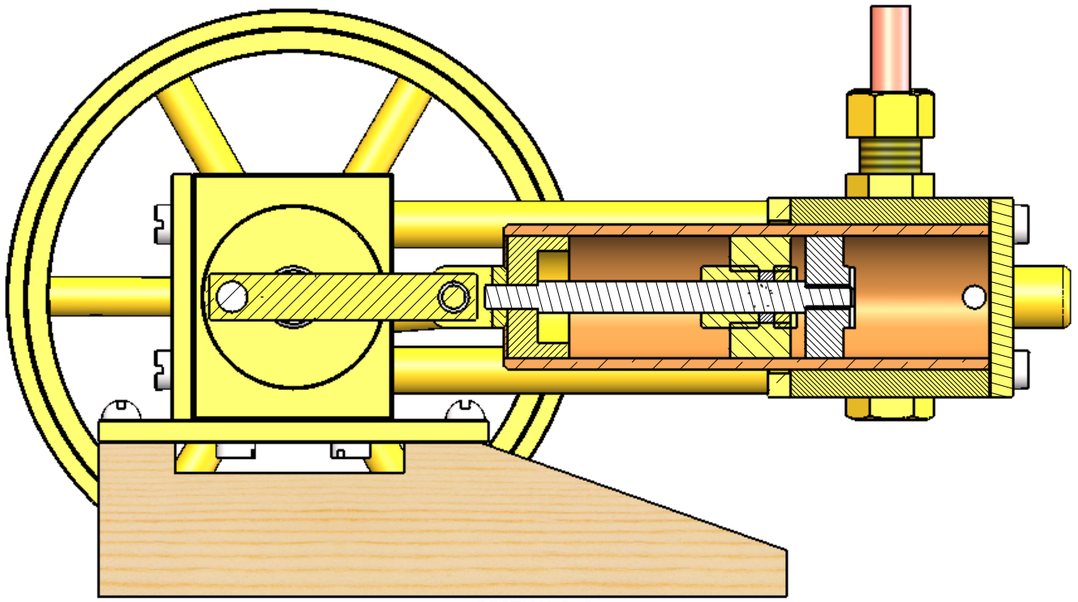

SECTION B-B

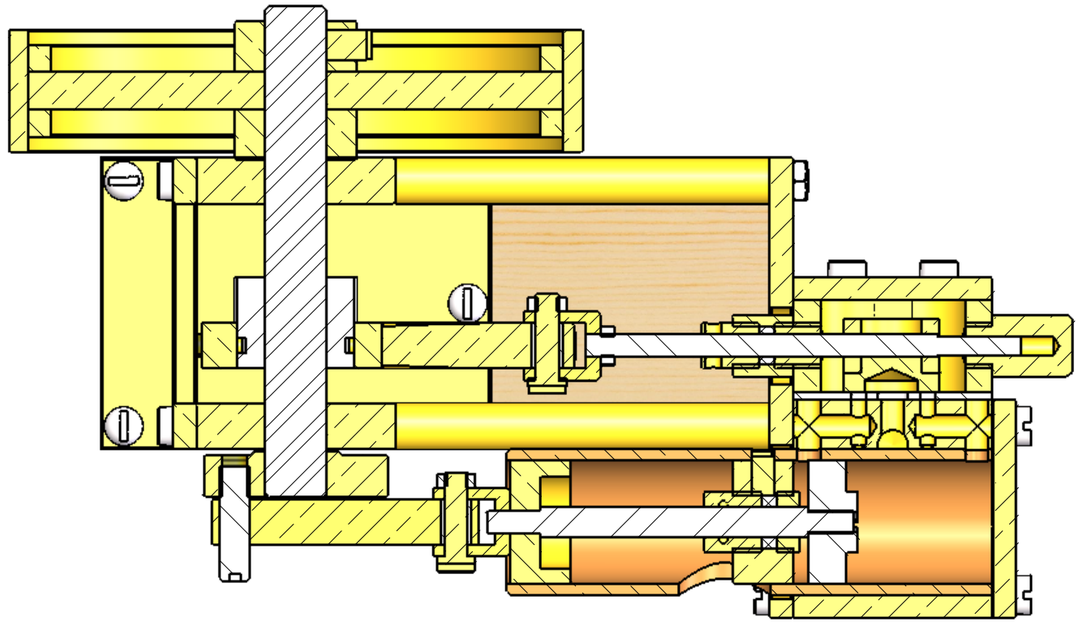

SECTION C-C

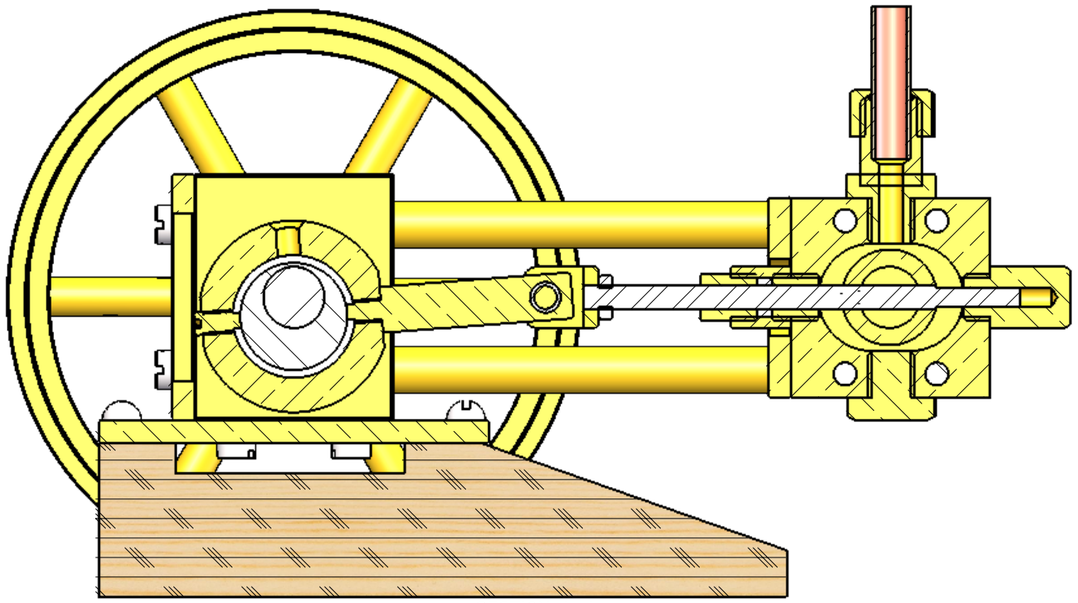

SECTION A-A

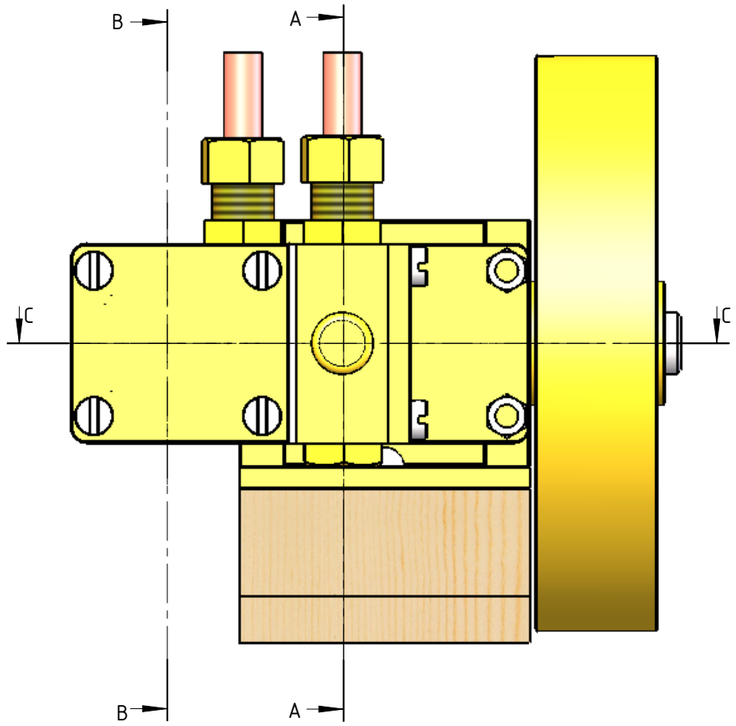

TITLE

SINGLE CYLINDER HORIZONTAL STEAM ENGINE WITH SLIDE VALVE SECTIONS

PLEASE NOTE THIS STEAM ENGINE WAS DESIGNED AND BUILT BY MR. G.P. QUAYLE OF AUCKLAND NEW ZEALAND

REV	DESCRIPTION	DATE
A	ISSUED FOR CONSTRUCTION	09/2007

JDW DRAUGHTING SERVICES
12 BRIGHTWELL STREET
PAPAKURA NEW ZEALAND
TEL/FAX 0064-09-2988815
E-MAIL:dewaal@xtra.co.nz

DRAWN BY	PROJECTION	DRAWING NUMBER
J.A.M. DE WAAL		SCSE-04
DATE: SEPT 2006	SCALE: 1:1 @A3 OR AS STATED	CAD FILE / REV: A

REMOVE SHARP EDGES AND DEBUR HOLES

IF IN DOUBT ASK :

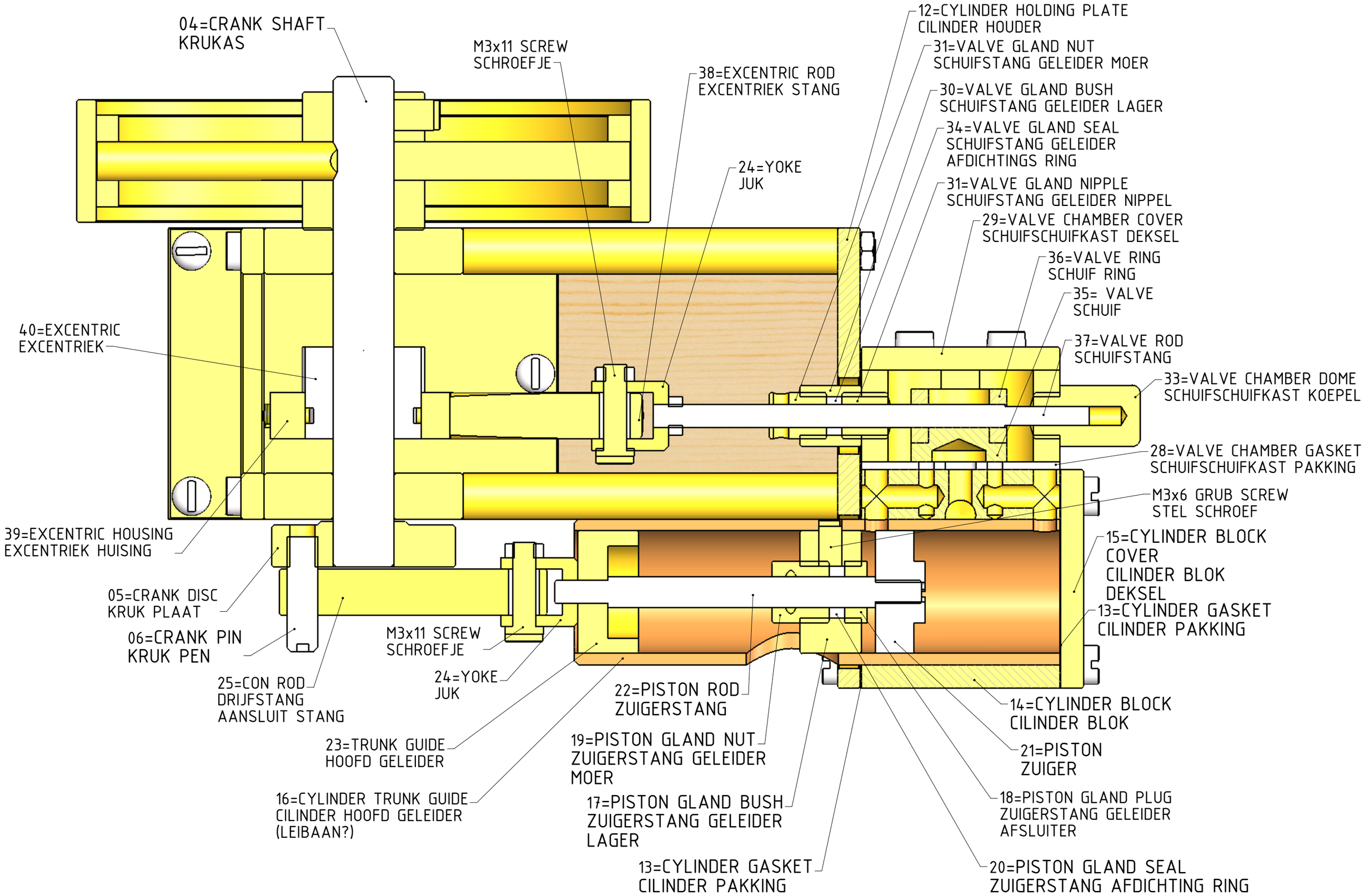

TITLE

SINGLE CYLINDER HORIZONTAL STEAM ENGINE WITH SLIDE VALVE SECTIONS

PLEASE NOTE THIS STEAM ENGINE WAS DESIGNED AND BUILT BY MR. G.P. QUAYLE OF AUCKLAND NEW ZEALAND

REV	DESCRIPTION	DATE
A	ISSUED FOR CONSTRUCTION	09/2007

JDW DRAUGHTING SERVICES
12 BRIGHTWELL STREET
PAPAKURA NEW ZEALAND
TEL/FAX 0064-09-2988815
E-MAIL:dewaal@xtra.co.nz

DRAWN BY	PROJECTION	DRAWING NUMBER
J.A.M. DE WAAL		SCSE-05
DATE: SEPT 2006	SCALE: 1:1 @A3 OR AS STATED	CAD FILE / REV: A