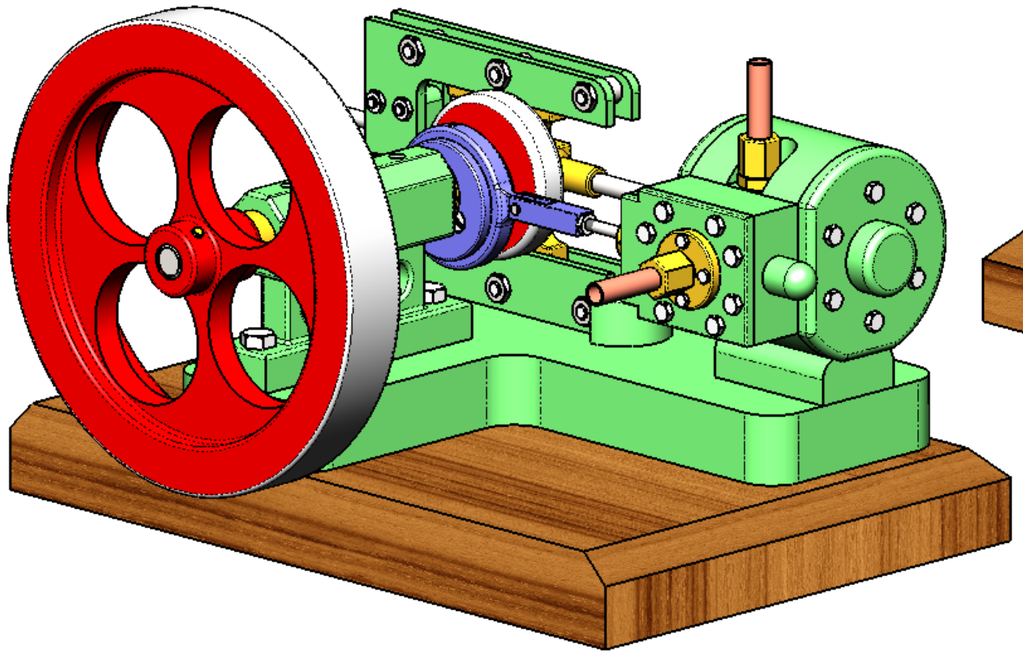

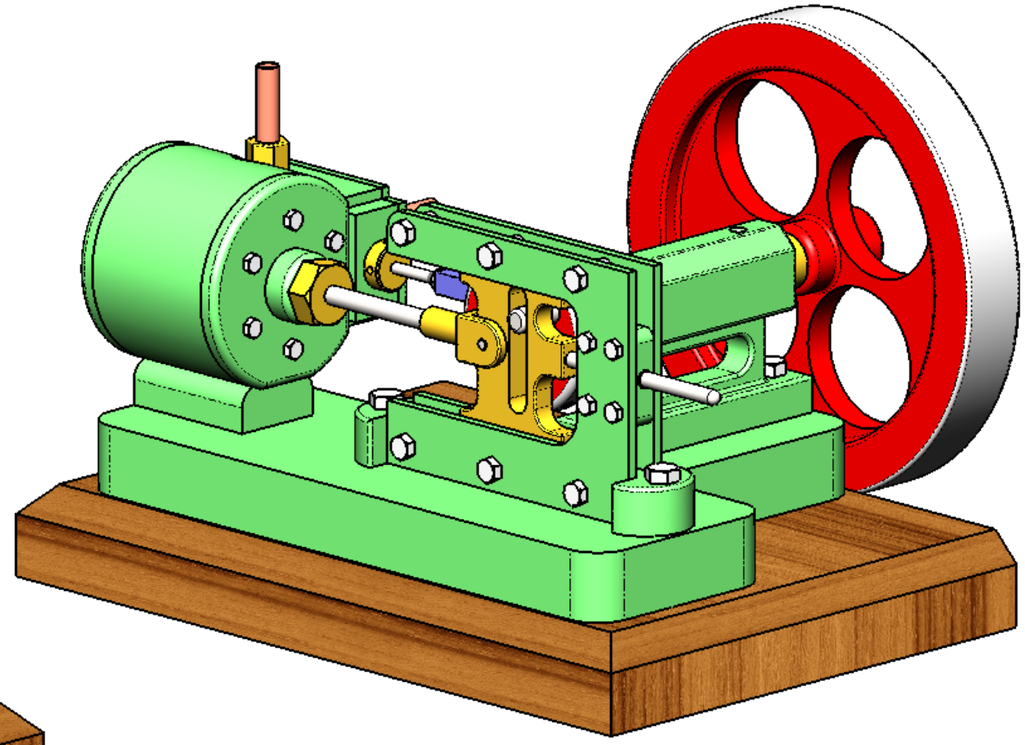

| QTY | PART NUMBER |
|---|---|
| 1 | SCOTCH YOKE-01-BASE PLATE |
| 1 | SCOTCH YOKE-02-CYLINDER |
| 1 | SCOTCH YOKE-03-CYLINDER FRONT LID |
| 1 | SCOTCH YOKE-04-CYLINDER REAR LID |
| 1 | SCOTCH YOKE-05-PISTON ROD GLAND |
| 1 | SCOTCH YOKE-06-STEAM CHEST |
| 1 | SCOTCH YOKE-07A-STEAM CHEST COVER |
| 1 | SCOTCH YOKE-07B-STEAM INLET GLAND |
| 1 | SCOTCH YOKE-08-VALVE ROD GLAND |
| 1 | SCOTCH YOKE-09-YOKE BOTTOM GUIDE SPACER |
| 2 | SCOTCH YOKE-10-YOKE GUIDE PLATE |
| 3 | SCOTCH YOKE-11-YOKE GUIDE PLATE SPACER |
| 1 | SCOTCH YOKE-12-OUTER PISTON ROD GUIDE |
| 1 | SCOTCH YOKE-13-BEARING SUPPORT |
| 1 | SCOTCH YOKE-14-BEARING LINER |
| 1 | SCOTCH YOKE-15-CYLINDER SPACER PLATE |
| 1 | SCOTCH YOKE-16-CRANK SHAFT |
| 1 | SCOTCH YOKE-17-FLYWHEEL |
| 1 | SCOTCH YOKE-18-FLYWHEEL END SPACER |
| 1 | SCOTCH YOKE-19-YOKE |
| 1 | SCOTCH YOKE-20-PISTON |
| 1 | SCOTCH YOKE-21-PISTON ROD |
| 1 | SCOTCH YOKE-22-PISTON ROD END |
| 1 | SCOTCH YOKE-23-PISTON RODEXTENSION |
| 1 | SCOTCH YOKE-24-SLIDE VALE |
| 1 | SCOTCH YOKE-25-SLIDE VALE BUCKLE |
| 1 | SCOTCH YOKE-26-ECCENTRIC SHEAVE |
| 1 | SCOTCH YOKE-27-ECCENTRIC STRAP |
| 1 | SCOTCH YOKE-28-VALVE ROD END |
| 1 | SCOTCH YOKE-29-VALVE ROD |
| 1 | SCOTCH YOKE-30-VALVE ROD EXTENSION |
| 1 | SCOTCH YOKE-31-EXHAUST NIPPLE |
| 2 | SCOTCH YOKE-32-EXHAUST NIPPLE NUT |
| 2 | SCOTCH YOKE-33-EXHAUST PIPE |
| 1 | SCOTCH YOKE-34-WOODEN BASE |
| 1 | SCOTCH-M10 WASHER |
| 4 | SCOTCH-M2.5x6 HEX BOLT |
| 5 | SCOTCH-M3 NUT |
| 1 | SCOTCH-M3x12 C-SINK SCREW |
| 12 | SCOTCH-M3x12 HEX BOLT |
| 4 | SCOTCH-M3x15 HEX BOLT |
| 8 | SCOTCH-M3x25 HEX BOLT |
| 4 | SCOTCH-M3x4 GRUB SCREW |
| 1 | SCOTCH-M3x8 GRUB SCREW |
| 6 | SCOTCH-M4 NUT |
| 6 | SCOTCH-M4x15 HEX BOLT |
| 2 | SCOTCH-M5 NUT |
| 4 | SCOTCH-M5x20 HEX BOLT |
| 2 | SCOTCH-M5x32 HEX BOLT |

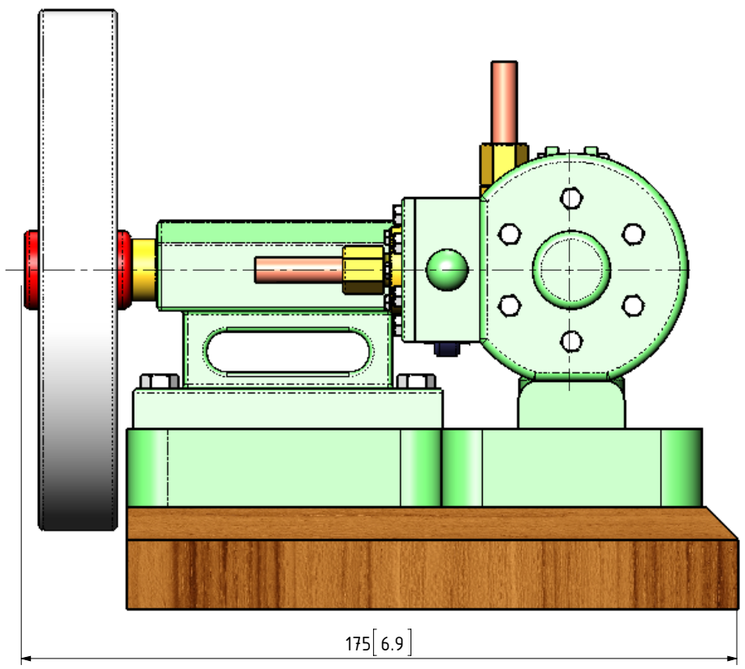


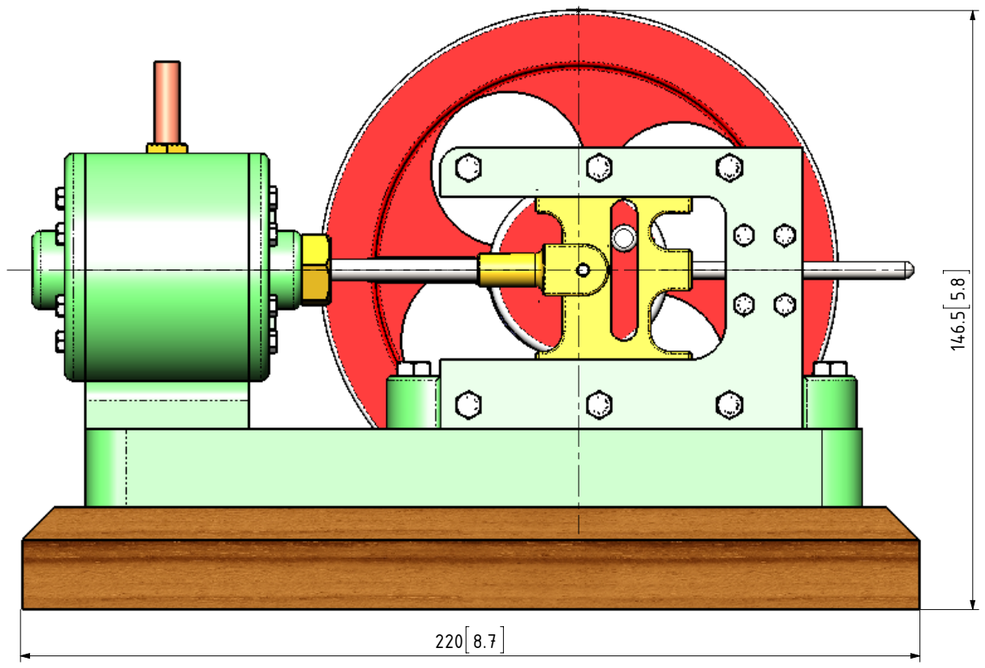


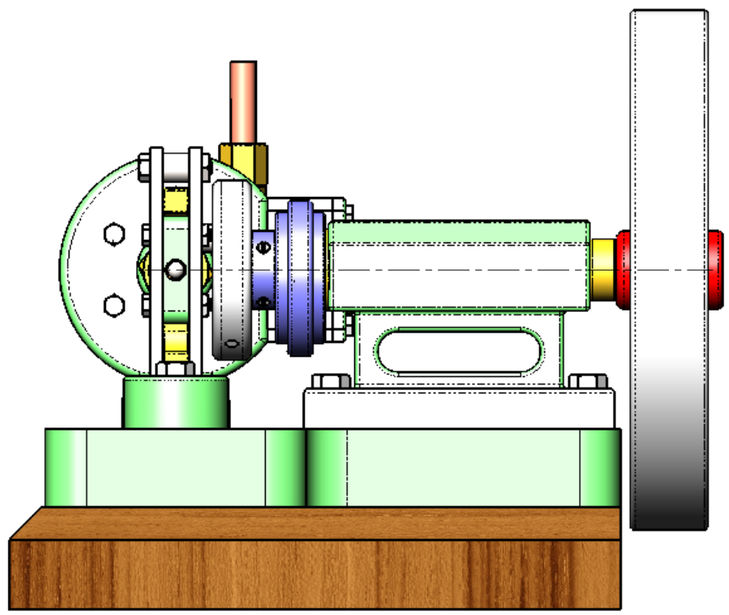

NOTES: P/MS=PAINTED MILD STEEL BRS=BRASS BRZ=BRONZE S/S=STAINLESS OR SILVER STEEL BMS=BRIGHT MILD STEEL

PLEASE NOTE: ORIGINAL DESIGN BY Mr. BOB MIDDLETON, MUNDESLEY, NORFOLK, ENGLAND

TITLE
SCOCTH YOKE MODEL STEAM ENGINE
DESIGNED AND BUILD BY BOB MIDDLETON

DRAWING CONTENTS
GENERAL ARRANGEMENT

PROJECT No
JDW DRAUGHTING SERVICES
J.A.M. DE WAAL. 12 BRIGHTWELL STREET PAPAKURA 2110. NEW ZEALAND. PHONE: 0064 09 2988815. MOB: 0211791000
E-MAIL: dewaal@xtra.co.nz.

PROJECTION

DATE AUGUST 2013

SHEET:01 OF 03

MODEL SCALE: 1:1
DWG SCALE: 1:1 @A3 OR AS SHOWN
Copyright © J.A.M. DE WAAL PAPAKURA NZ
A3 No: SCYKSE-01

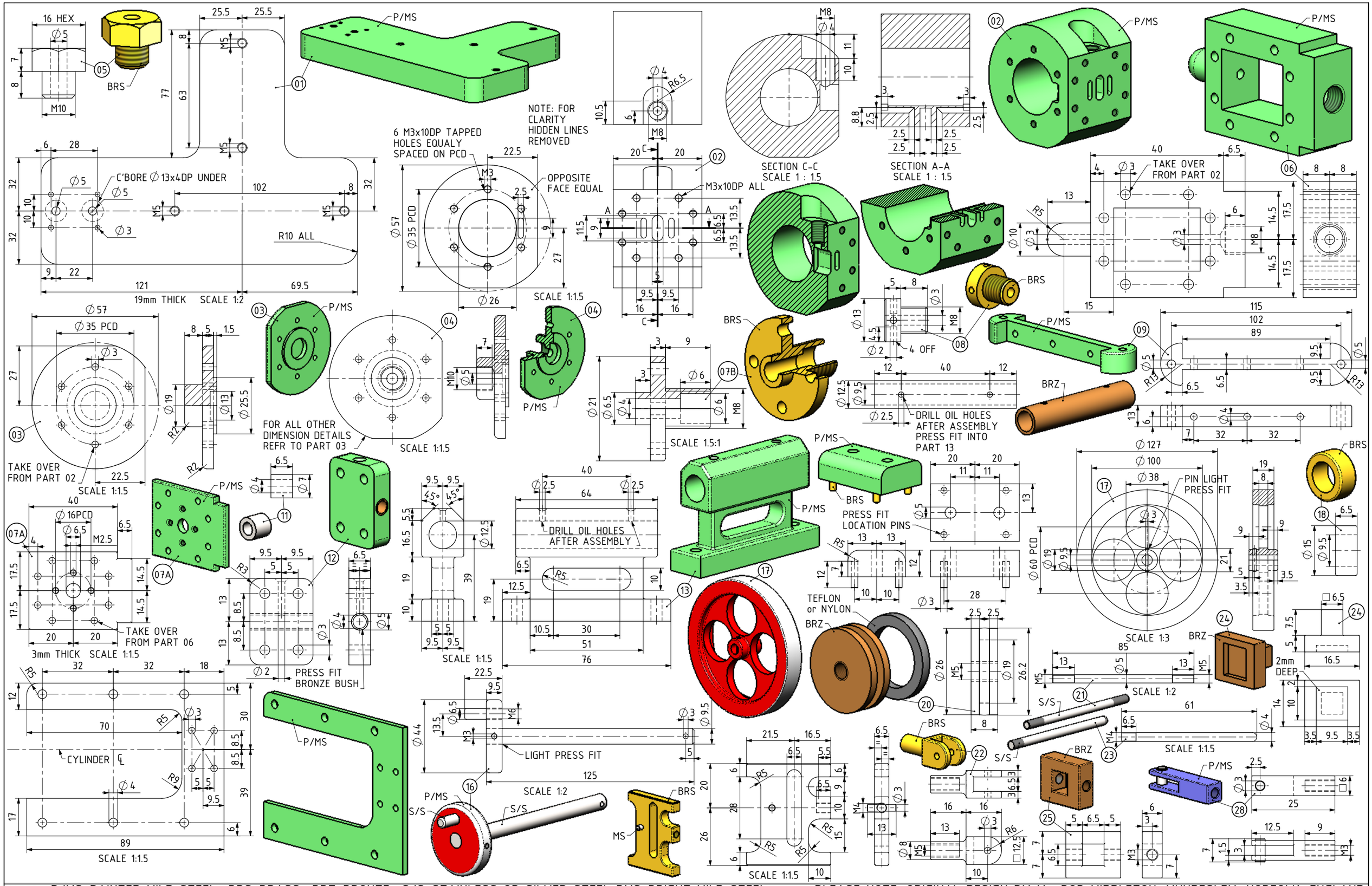


NOTES: P/MS=PAINTED MILD STEEL BRS=BRASS BRZ=BRONZE S/S=STAINLESS OR SILVER STEEL BMS=BRIGHT MILD STEEL

PLEASE NOTE: ORIGINAL DESIGN BY Mr. BOB MIDDLETON, MUNDESLEY, NORFOLK, ENGLAND

| | | | |
|---|---|---|---|
| TITLE<br>SCOCTH YOKE MODEL STEAM ENGINE<br>DESIGNED AND BUILD BY BOB MIDDLETON | DRAWING CONTENTS<br>PARTS AND ASSEMBLIES | PROJECT No<br>JDW DRAUGHTING SERVICES<br>J.A.M. DE WAAL. 12 BRIGHTWELL STREET PAPAKURA 2110. NEW ZEALAND. PHONE: 0064 09 2988815. MOB: 0211791000<br>E-MAIL: dewaal@xtra.co.nz. | PROJECTION<br>DATE AUGUST 2013<br>SHEET:02 OF 03 |
| | | | MODEL SCALE: 1:1<br>DWG SCALE: 1:1 @A3 OR AS SHOWN<br>Copyright © J.A.M. DE WAAL PAPAKURA NZ<br>A3 No: SCYKSE-02 |

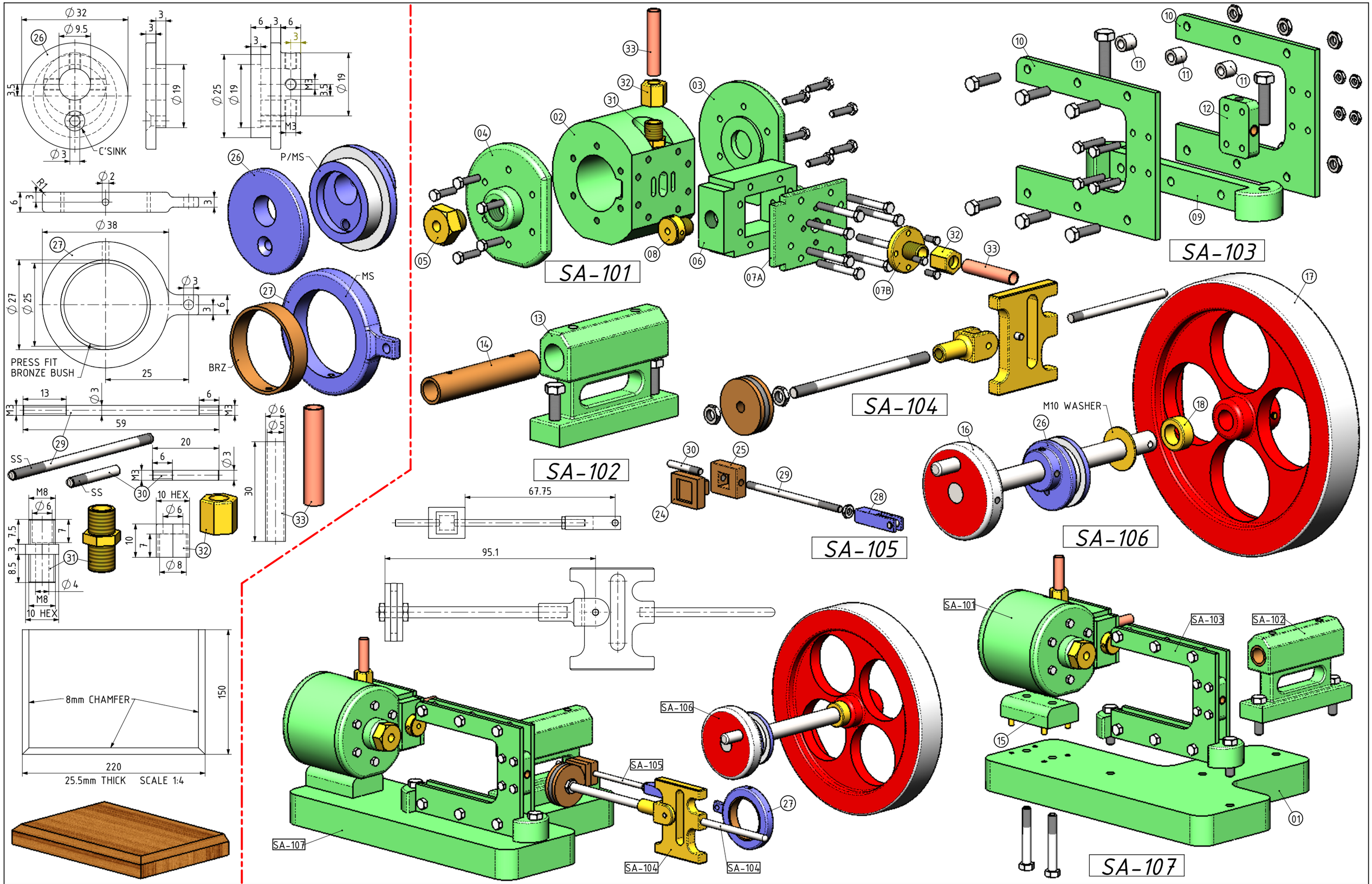


NOTES: P/MS=PAINTED MILD STEEL BRS=BRASS BRZ=BRONZE S/S=STAINLESS OR SILVER STEEL BMS=BRIGHT MILD STEEL

PLEASE NOTE: ORIGINAL DESIGN BY Mr. BOB MIDDLETON, MUNDESLEY, NORFOLK, ENGLAND

| | | | |
|---|---|---|---|
| TITLE<br>SCOCTH YOKE MODEL STEAM ENGINE<br>DESIGNED AND BUILD BY BOB MIDDLETON | DRAWING CONTENTS<br>PARTS AND ASSEMBLIES | PROJECT No<br>JDW DRAUGHTING SERVICES<br>J.A.M. DE WAAL. 12 BRIGHTWELL STREET PAPAKURA 2110. NEW ZEALAND. PHONE: 0064 09 2988815. MOB: 0211791000 E-MAIL: dewaal@xtra.co.nz. | PROJECTION<br>DATE AUGUST 2013<br>SHEET:03 OF 03 |
| | | MODEL SCALE: 1:1<br>DWG SCALE: 1:1 @A3 OR AS SHOWN<br>Copyright © J.A.M. DE WAAL PAPAKURA NZ | A3 No: SCYKSE-03 |