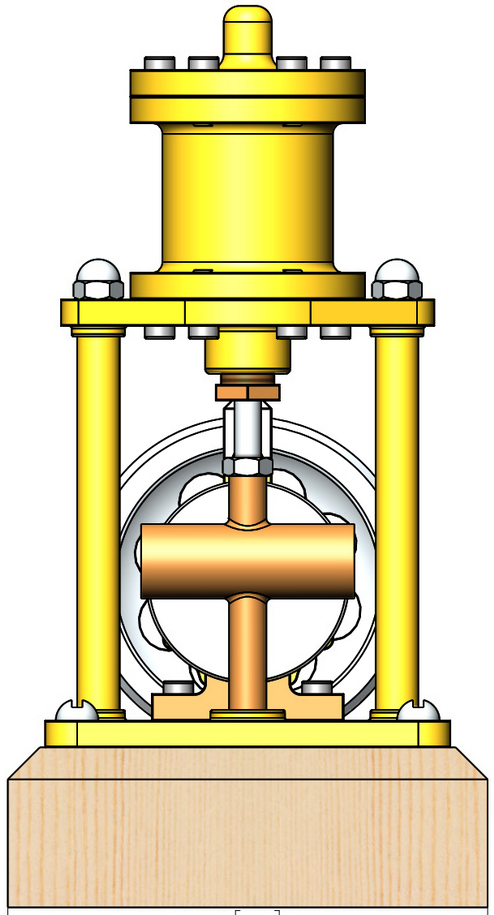

90 [3.54]

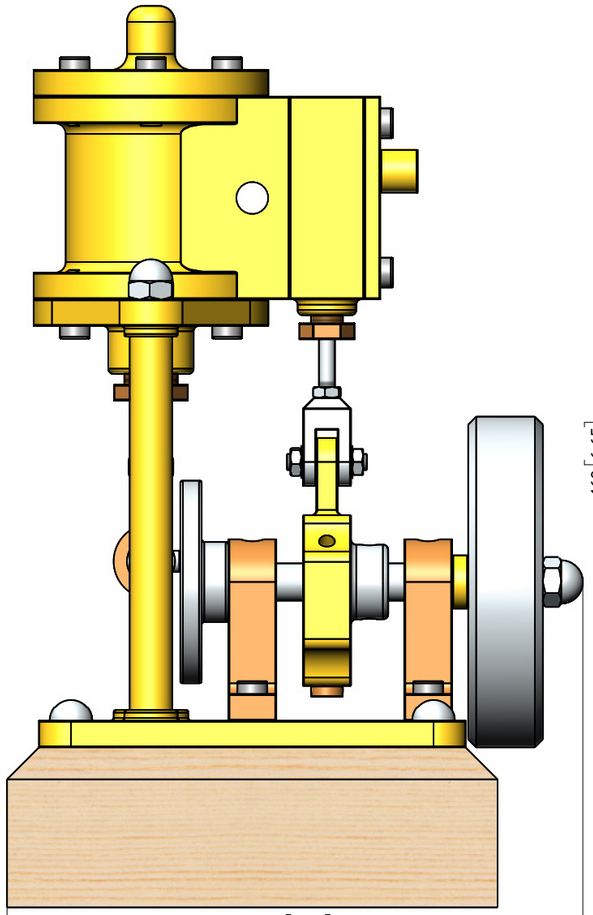

108 [4.25]

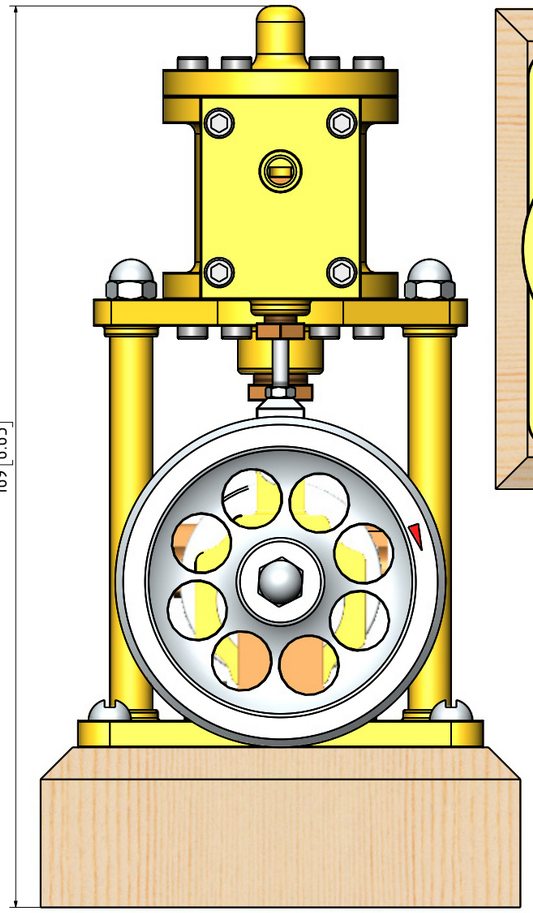

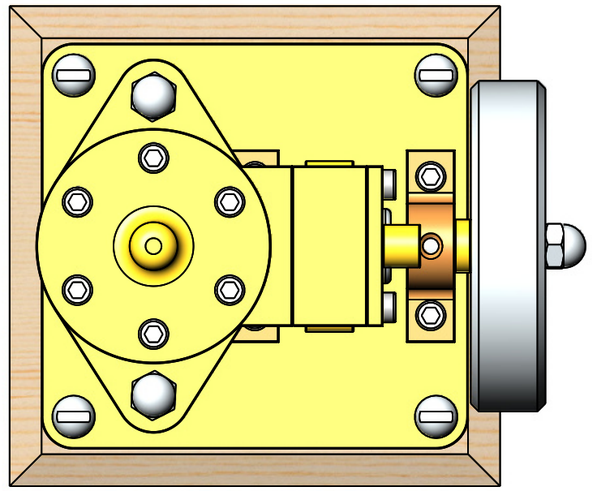

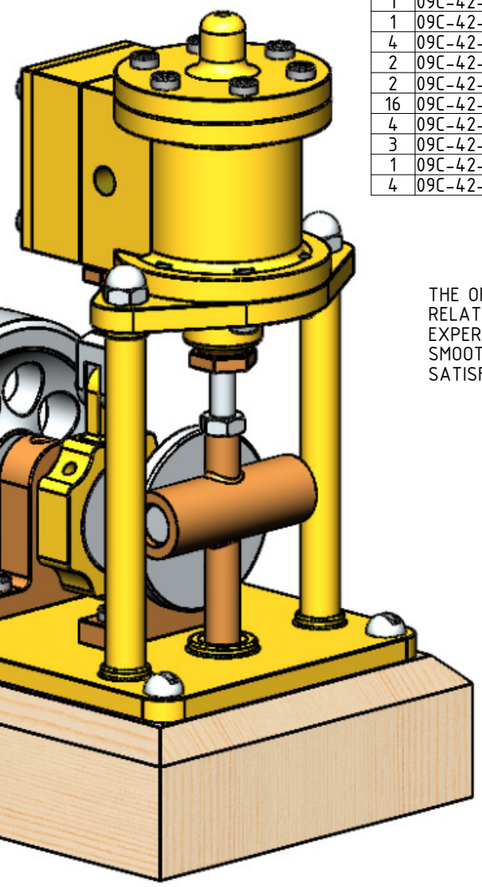

QTY.	PART NUMBER
1	09C-42-00-1-01-BASE PLATE
2	09C-42-00-1-02-CRANK SHAFT BEARING
1	09C-42-00-1-03-CYLINDER+VALVE CHEST
1	09C-42-00-1-04-CYLINDER TOP COVER
1	09C-42-00-1-05-WOOD BASE
1	09C-42-00-2-01-CRANK SHAFT
1	09C-42-00-2-02-PISTON+CROSSHEAD
1	09C-42-00-2-03-CROSSHEAD SLIDE
1	09C-42-00-2-04-ECCENTRIC SHEAVE
1	09C-42-00-2-05-ECCENTRIC STRAP
1	09C-42-00-2-06-SLIDE VALVE
4	09C-42-00-M3 NUT
2	09C-42-00-M3 WASHER-BRASS
2	09C-42-00-M3x3 A-K GRUB SCREW
16	09C-42-00-M4x10 A-K CYL HEAD SCREW
4	09C-42-00-M4x24 A-K CYL HEAD SCREW
3	09C-42-00-M5 DOME NUT
1	09C-42-00-M5 NUT
4	09C-42-00-M5x20-ROUND HEAD WOOD SCREW

NOTES:
0. ALL DRAWINGS ARE IN METRIC MEASUREMENTS
1. ALL ENGINEERING PRACTICES SHALL BE APPLIED WITH REGARDS TO HOLE AND SHAFT TOLERANCES.
2. WHERE SCREWS OR BOLTS ARE USED THE CLEARANCE HOLES SHALL BE APPROXIMATELY 5% TO 8% LARGER THAN THE MATCHING TAPPED HOLE.
3. PREFERABLY ALL TAPPED HOLES AND MATCHING SCREWS AND/OR BOLTS TO BE METRIC FINE (MF)
4. MATERIALS SPECIFIED ON THE DRAWINGS ARE INDICATIVE ONLY. THE BUILDER CAN MAKE HIS/HER OWN MATERIAL CHOICE.
5. ALL CONNECTIONS/JOINTS WHICH HAVE STEAM PRESSURE APPLIED TO IT SHALL BE SILVER/HARD SOLDERED.
6. COMPRESSION SPRINGS ARE DRAWN IN COMPRESSED STATE (CP), UNCOMPRESSED STATE IS APPROX 40% TO 60% LONGER THEN COMPRESSED STATE.
7. WHERE PREFERRED SCREW OR RIVETED CONNECTIONS CAN BE OMITTED AND PARTS CAN BE BONDED TOGETHER BY USING EITHER HIGH STRENGTH GLUE, EPOXY RESIN, OR SOLDER.
8. PARTS WHICH ARE DIRECTLY EXPOSED TO STEAM AND/OR WATER SHOULD BE CONSTRUCTED USING NON-FERROUS OR NON CORROSIVE MATERIAL SUCH AS BRASS, BRONZE, GUNMETAL, STAINLESS STEEL, COPPER OR MONEL.
9. THE ORDER IN WHICH THE PARTS/COMPONENTS ARE MANUFACTURED AND THE MODEL IS ASSEMBLED IS ENTIRELY LEFT TO THE BUILDER/MODEL MAKER.
10. A COLOUR SCHEME FOR THIS PROJECT IS ENTIRELY LEFT UP TO THE MODEL MAKER.
11. THE MANNER IN WHICH THE PARTS/COMPONENTS ARE MANUFACTURED IS ENTIRELY LEFT UP TO THE BUILDER.
12. USE LOCTITE, ON SCREW OR PRESS FIT CONNECTIONS OR SURFACES, WERE DEEMED NECESSARY TO PREVENT PARTS FROM LOOSENING.
13. WASHERS AND/OR SPRINGWASHERS SHALL BE USED WHERE DEEMED NECESSARY.
XX. ERRORS AND/OR OMISSIONS MAY OCCUR IN THE DRAWINGS, DO NOT HESITATE TO CONTACT ME SO THAT THE ERRORS/OMISSIONS CAN BE RECTIFIED.

OTHER ABBREVIATIONS
DP = DEEP
DAA= DRILL AFTER ASSEMBLY
D&TAA= DRILL AND TAP AFTER ASSEMBLY
CF = CLOSE FIT (SIZE FOR SIZE)
PF = PRESS FIT
PFAA= PRESS FIT AFTER ASSEMBLY
PCD = PITCH CIRCLE DIAMETER
RM = REAM
HEX = HEXACON, 6SIDED
CP = COMPRESSED
KNL = KNURLED
CSK = COUNTERSINK
PL = PLACES
DWL= DOWEL
SPF= SPOTFACE
(T)HESOP=(TAPPED)HOLES EQUALLY SPACED ON PCD
(T)HESOC=(TAPPED)HOLES EQUALLY SPACED ON CIRCUMFERENCE
OD = OUTSIDE DIAMETER
ID = INSIDE DIAMETER
SA-xxx = SUB ASSEMBLY-xxx

MATERIAL ABBREVIATIONS:
ALU = ALUMINIUM
HALU= HARD ALUMINIUM
BRS = BRASS
BRZ = BRONZE OR GUNMETAL (BRZ/GM)
CI = CAST IRON
CU = COPPER
GRA = GRAPHITE
MS = MILD STEEL/BRIGHT MILD STEEL
SS = SILVER STEEL OR STAINLESS STEEL
SPS = SPRING STEEL
PEEK= POLYETHER ETHER KETONE
SYN = SYNTHETIC MATERIAL SUCH AS VETON, NYLON, TEFLON OR RUBBER
IN GENERAL SYNTHETIC MATERIALS SOULD BE ABLE TO WITHSTAND THE HEAT AND PRESSURE(S) APPLIED TO THEM.
nnn/nnn MEANS THAT EITHER MATERIAL CAN BE USED

THE OFF SET ANGLE OF THE ECCENTRIC IN RELATION TO THE CRANK AXIS TO BE EXPERIMENTALLY DETERMINED FOR THE SMOOTH RUNNING OF THE ENGINE AND SATISFACTION OF THE BUILDER

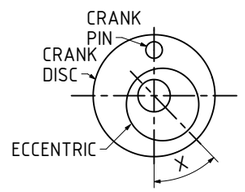

NOTES: THIS DESIGN IS BASED ON DRAWINGS WHICH WERE GIVEN TO ME. THE ORIGINAL DESIGN AND DRAWINGS WERE BY RAYMOND YATES. MAGAZINE AND DATES UNKOWN (FIG 93& FIG 95.

TITLE
A SIMPLE VERTICAL STEAM ENGINE WITH SLIDE CRANK (SCOTCH YOKE TYPE)

DRAWING CONTENTS
GENERAL ARRANGEMENT, ISOMETRIC VIEW, NOTES, BILL OF MATERIALS

PROJECT No 09C-42-00
JDW DRAUGHTING SERVICES
J.A.M. DE WAAL. 12 BRIGHTWELL STREET PAPAKURA 2110. NEW ZEALAND. PHONE: 0064 09 2988815. MOB: 0211791000 E-MAIL: dewaal@xtra.co.nz.

PROJECTION | JDWDS | MODEL SCALE: 1:1
DWG SCALE: 1:1 @A3 OR AS SHOWN
DATE NOVEMBER 2019
Copyright © J.A.M. DE WAAL PAPAKURA NZ
SHEET: 01 OF 03 | A3 | No: 09C-42-00-SHT01

DRAWINGS ARE FOR PERSONAL USE ONLY NOT FOR COMMERCIAL PURPOSES

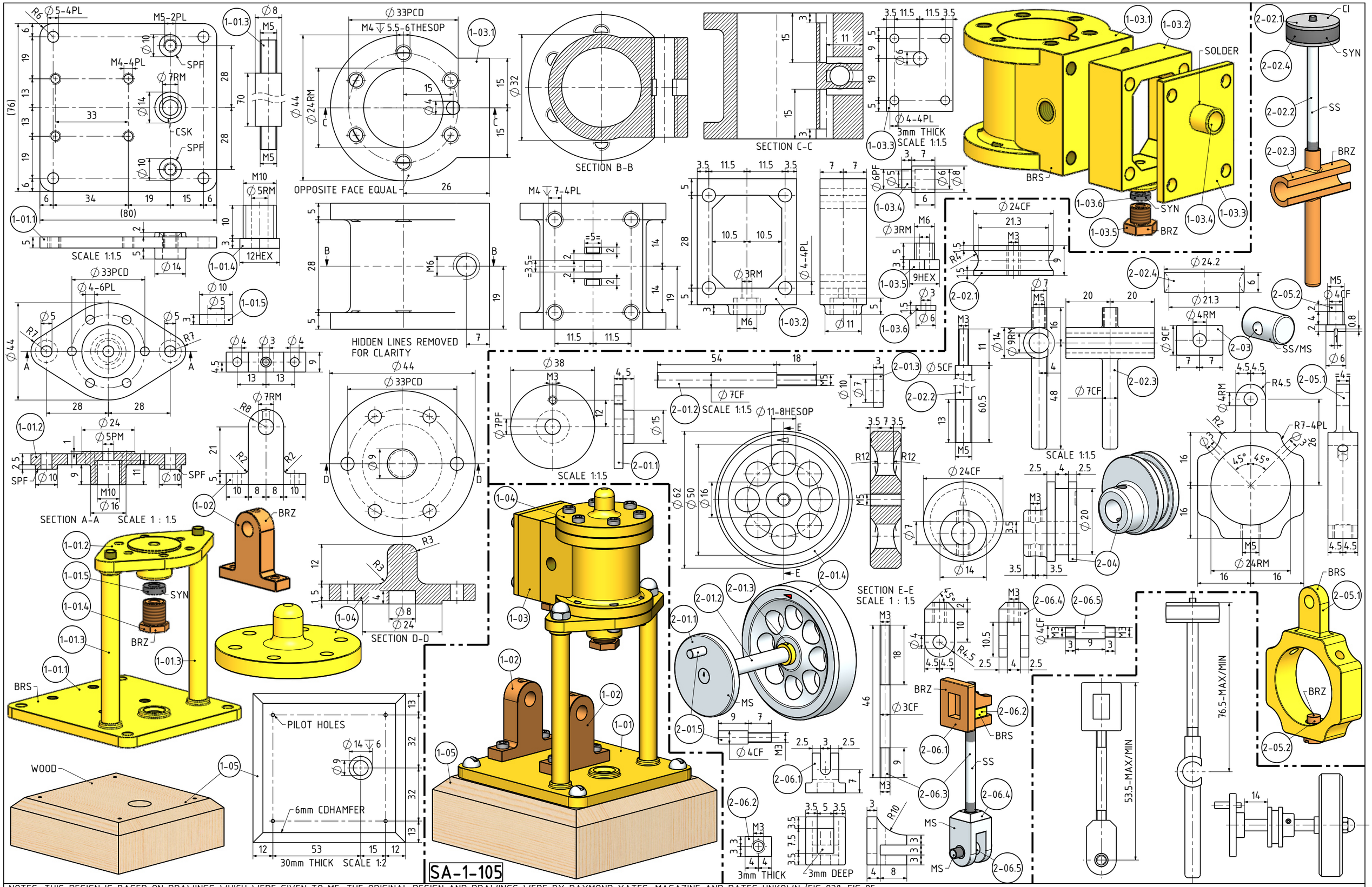

NOTES: THIS DESIGN IS BASED ON DRAWINGS WHICH WERE GIVEN TO ME. THE ORIGINAL DESIGN AND DRAWINGS WERE BY RAYMOND YATES. MAGAZINE AND DATES UNKOWN (FIG 93& FIG 95.

TITLE A SIMPLE VERTICAL STEAM ENGINE WITH SLIDE CRANK (SCOTCH YOKE TYPE)	DRAWING CONTENTS PARTS AND ASSEMBLIES	PROJECT No 09C-42-00 JDW DRAUGHTING SERVICES J.A.M. DE WAAL. 12 BRIGHTWELL STREET PAPAKURA 2110. NEW ZEALAND. PHONE: 0064 09 2988815. MOB: 0211791000 E-MAIL: dewaal@xtra.co.nz.	PROJECTION JDWDS DATE NOVEMBER 2019 SHEET: 02 OF 03	MODEL SCALE: 1:1 DWG SCALE: 1:1 @A3 OR AS SHOWN Copyright © J.A.M. DE WAAL PAPAKURA NZ A3 No: 09C-42-00-SHT02

DRAWINGS ARE FOR PERSONAL USE ONLY NOT FOR COMMERCIAL PURPOSES

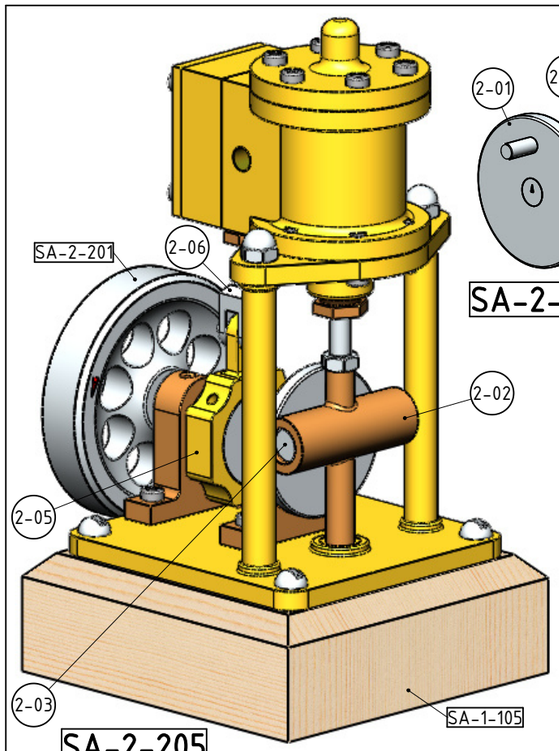

SA-2-205

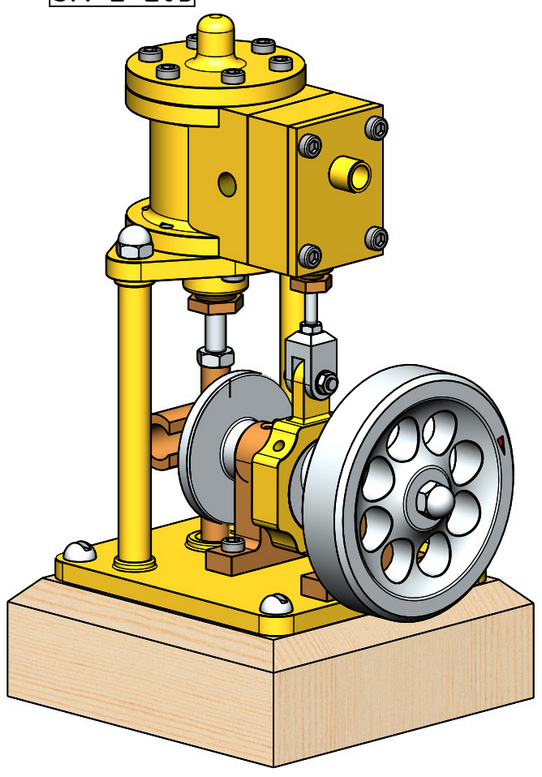

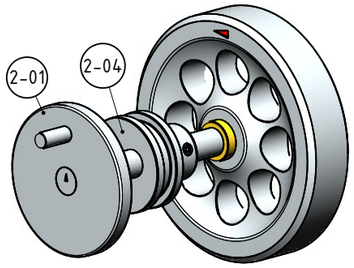

SA-2-201

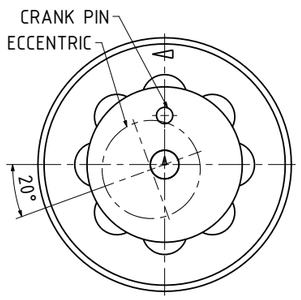

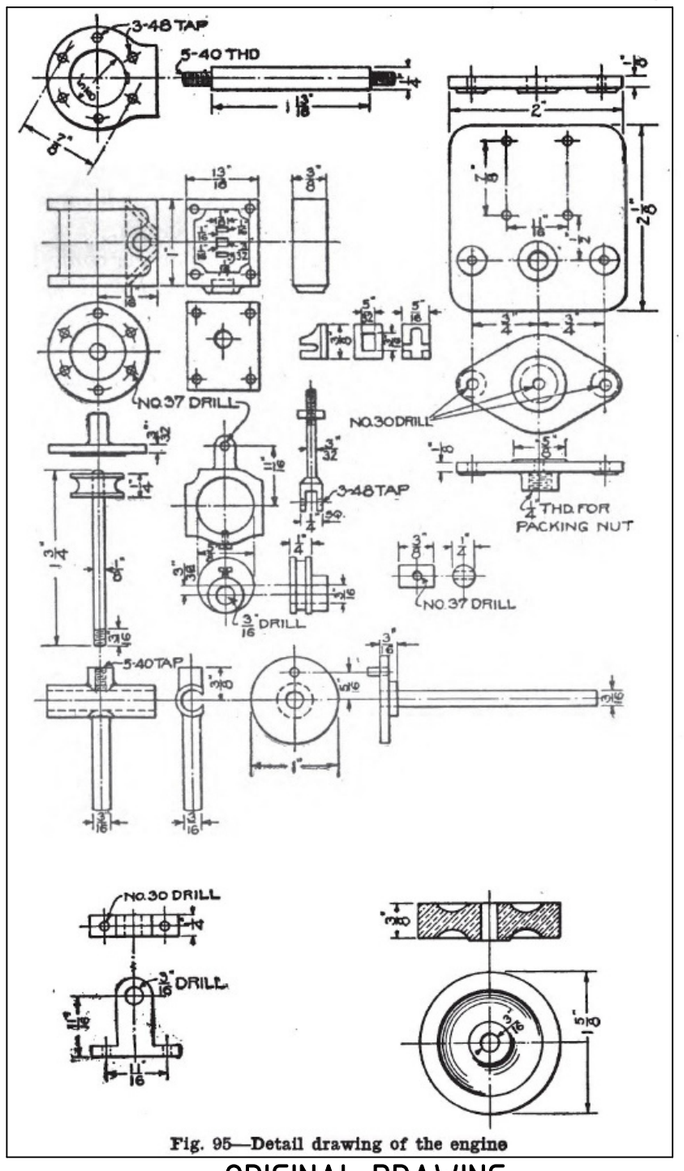

Fig. 95—Detail drawing of the engine

ORIGINAL DRAWING

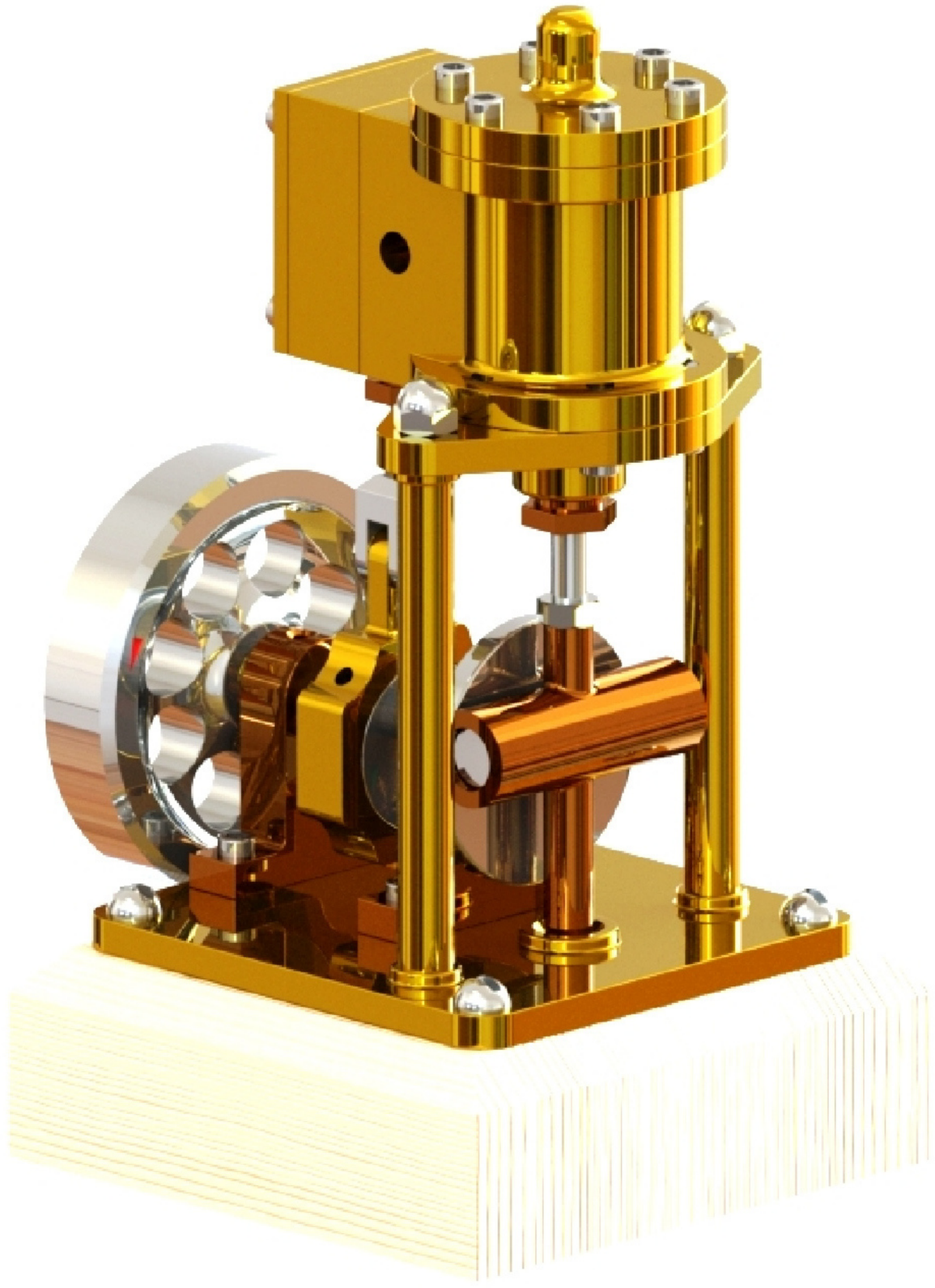

NOTES: THIS DESIGN IS BASED ON DRAWINGS WHICH WERE GIVEN TO ME. THE ORIGINAL DESIGN AND DRAWINGS WERE BY RAYMOND YATES. MAGAZINE AND DATES UNKOWN (FIG 93& FIG 95.

TITLE
A SIMPLE VERTICAL STEAM ENGINE WITH SLIDE CRANK (SCOTCH YOKE TYPE)

DRAWING CONTENTS
PARTS AND ASSEMBLIES, RENDERED PICTURE, ORIGINAL DRAWING

PROJECT No 09C-42-00
JDW DRAUGHTING SERVICES
J.A.M. DE WAAL. 12 BRIGHTWELL STREET PAPAKURA 2110. NEW ZEALAND. PHONE: 0064 09 2988815. MOB: 0211791000 E-MAIL: dewaal@xtra.co.nz.

PROJECTION | JDWDS | MODEL SCALE: 1:1
DATE NOVEMBER 2019 | DWG SCALE: 1:1 @A3 OR AS SHOWN
SHEET: 03 OF 03 | A3 | No: 09C-42-00-SHT03

Copyright © J.A.M. DE WAAL PAPAKURA NZ
DRAWINGS ARE FOR PERSONAL USE ONLY NOT FOR COMMERCIAL PURPOSES