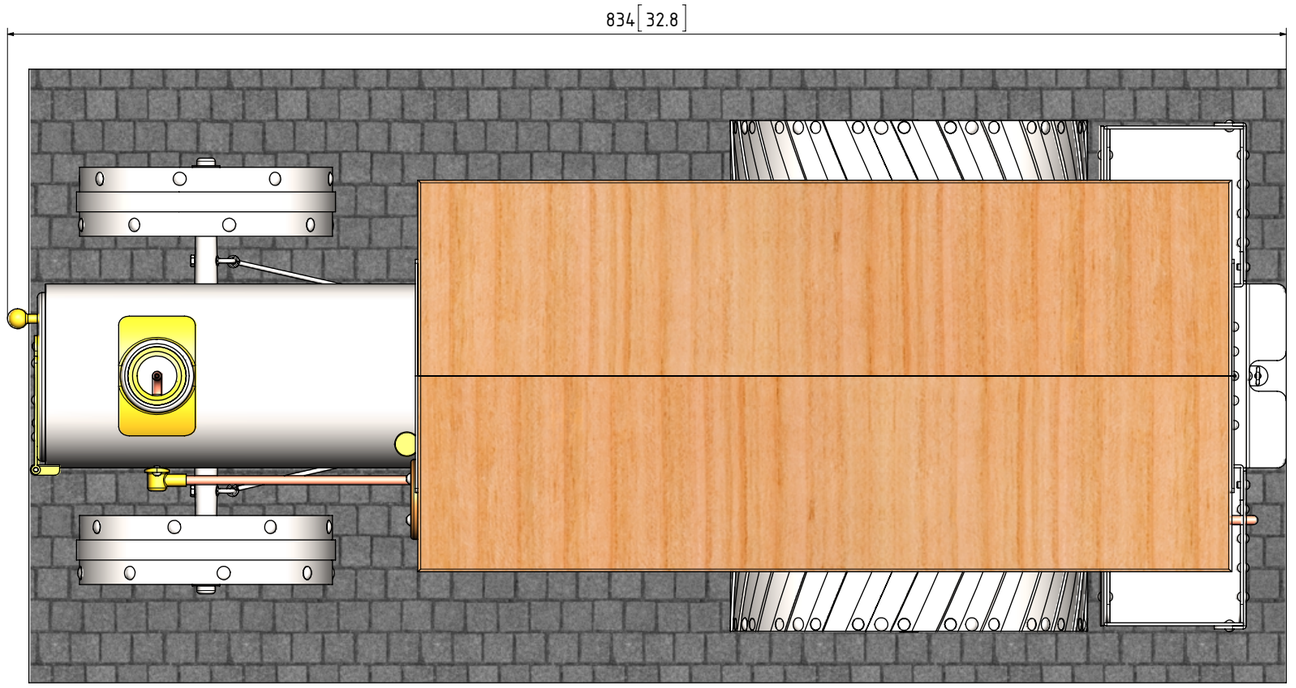

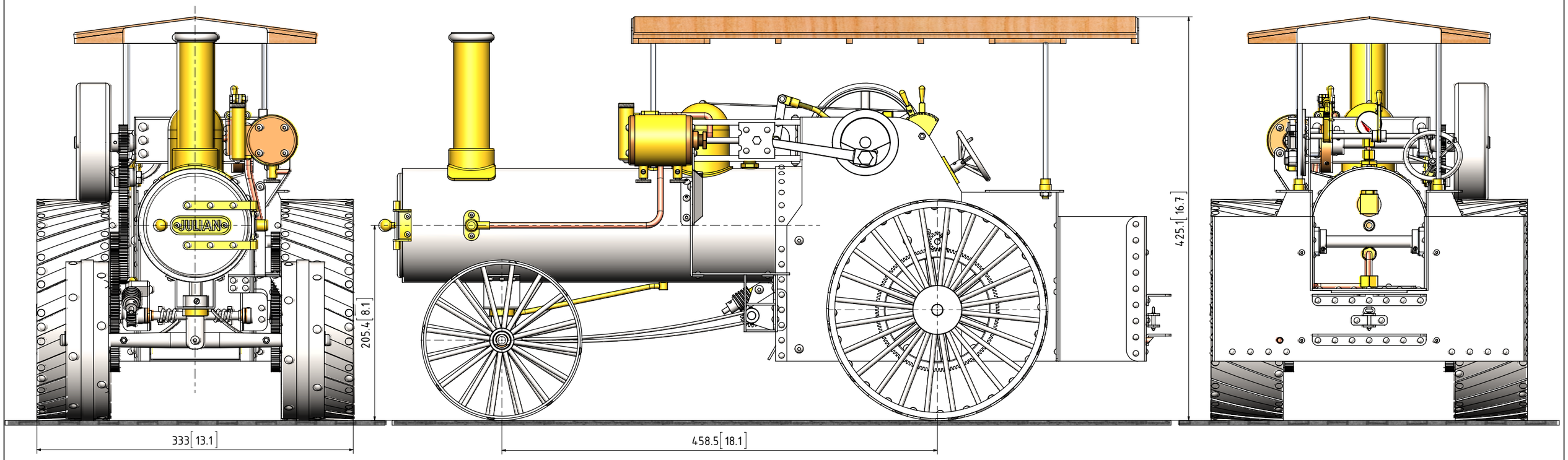

NOTES: THIS MODEL TRACTION ENGINE IS LOOSLY BASED ON UPON THE FULL-SIZE TRACTORS FORMERLY BUILT BY THE J. I. CASE CO. BUT IS NOT AN EXACT SCALE REPLICA

TITLE
KEROSINE FIRED MODEL STEAM TRACTION ENGINE CALLED "JULIAN"

DRAWING CONTENTS
GENERAL ARRANGEMENT

PROJECT No 08-07-00
JDW DRAUGHTING SERVICES
J.A.M. DE WAAL. 12 BRIGHTWELL STREET PAPAKURA 2110. NEW ZEALAND. PHONE: 0064 09 2988815. MOB: 0211791000
E-MAIL: dewaal@xtra.co.nz.

PROJECTION JDWDS
DATE JUNE-2015
SHEET: 01 OF 10

MODEL SCALE: 1:1
DWG SCALE: NTS @A3 OR AS SHOWN
Copyright © J.A.M. DE WAAL PAPAKURA NZ
A3 No: JULIAN-01

QTY.	PART NUMBER
1	JULIAN-1-01-RH-HORN PLATE
1	JULIAN-1-02-LH-HORN PLATE
1	JULIAN-1-03-MOTION SUPPORT PLATE
1	JULIAN-1-04-VALVE ROCKER MOUNT
1	JULIAN-1-05-LH PLATFORM UNDER FRAME
1	JULIAN-1-06-RH PLATFORM UNDER FRAME
1	JULIAN-1-07-FOOTPLATE
1	JULIAN-1-08-REAR FUEL BUNKER
1	JULIAN-1-09A-LH-REAR FUEL BUNKER SIDE
1	JULIAN-1-09B-RH-REAR FUEL BUNKER SIDE
1	JULIAN-1-10A-LH-REAR FUEL BUNKER INSIDE
1	JULIAN-1-10B-RH-REAR FUEL BUNKER INSIDE
1	JULIAN-1-11A-LH-PLATFORM SIDE
1	JULIAN-1-11B-RH-PLATFORM SIDE
1	JULIAN-1-12-DRAW BAR
1	JULIAN-1-13-DRAW BAR PIN
1	JULIAN-1-14-REAR STEP
1	JULIAN-1-14-REAR STEP
6	JULIAN-1-15-BEARING BLOCK
6	JULIAN-1-16-BEARING
1	JULIAN-1-17-STEERING COLUMN TOP BRACKET
1	JULIAN-1-18-THROTTLE CONTROL SHAFT
1	JULIAN-1-19-DUMMY REVERSING QUADRANT
1	JULIAN-1-20-REVERSING HANDLE
1	JULIAN-1-21A-FUEL TANK BOTTOM PART
1	JULIAN-1-21B-FUEL TANK TOP PART
2	JULIAN-1-22-BURNER
1	JULIAN-1-23-CENTER BURNER
2	JULIAN-1-24-REAR ROOF SUPPORT POLE
8	JULIAN-1-25-ROOF RAFTER
2	JULIAN-1-26-ROOF END PLATE
2	JULIAN-1-27-ROOF
1	JULIAN-1-28-ROOF POLLE HOLDING BLOCK
1	JULIAN-1-28-ROOF POLLE HOLDING BLOCK
1	JULIAN-1-28-ROOF POLLE HOLDING BLOCK
1	JULIAN-1-29-IDLER GEAR WHEEL SHAFT
1	JULIAN-1-30-COAL BUNKER BOTTOM PLATE
1	JULIAN-1-31-COAL BUNKER BOTTOM PLATE

QTY.	PART NUMBER
1	JULIAN-2-01-BOILER SHELL
1	JULIAN-2-02-BOILER FRONT HEAD PLATE
1	JULIAN-2-03-BOILER BACK HEAD PLATE
3	JULIAN-2-04-BOILER TOP BUSH
1	JULIAN-2-05A-BACK HEAD BUSH
1	JULIAN-2-05B-BACK HEAD BUSH
1	JULIAN-2-06-BOILER LONGITUDINAL STAY
1	JULIAN-2-07-CENTER WATER PIPE
1	JULIAN-2-08-LH WATER PIPE-1
1	JULIAN-2-09-RH WATER PIPE-1
1	JULIAN-2-10-BOILER OUTER CASING
2	JULIAN-2-11- WATER PIPE-2
1	JULIAN-2-12-FIREBOX WRAPPER
1	JULIAN-2-13-FIREBOX THROAT PLATE
1	JULIAN-2-14-FIREBOX BACK PLATE
1	JULIAN-2-15-BOILER FRONT SUPPORT PLATE
1	JULIAN-2-16-STEAM DOME BOTTOM
1	JULIAN-2-17-STEAM DOME TOP
1	JULIAN-2-18-SMOKE STACK
1	JULIAN-2-19-SMOKE BOX DOOR
1	JULIAN-2-20-SMOKE BOX DOOR HINGE
1	JULIAN-2-21-SMOKE BOX DOOR HINGE BRACKET
1	JULIAN-2-22-PERCH BRACKET
1	JULIAN-2-23-PERCH BRACKET STAY
1	JULIAN-2-24-CYLINDER MOUNTING BRACKET
1	JULIAN-2-25-CYLINDER
1	JULIAN-2-26-CYLINDER FRONT LID
1	JULIAN-2-27-CYLINDER REAR LID
1	JULIAN-2-28-CYLINDER REAR LID GLAND
2	JULIAN-2-29-CROSS HEAD GUIDE
1	JULIAN-2-30-CYLINDER COVER
1	JULIAN-2-31-VALVE CHEST
1	JULIAN-2-32-VALVE CHEST COVER
1	JULIAN-2-33-VALVE CHEST GLAND
1	JULIAN-2-34-BLAST PIPE
1	JULIAN-2-35-EXHAUST PIPE+FLANGE
2	JULIAN-2-36-CONDENSATE RELEASE VALVE BODY
2	JULIAN-2-37-CONDENSATE RELEASE VALVE SPINDLE
1	JULIAN-2-38-FRONT RUNBOARD BRACKET
1	JULIAN-2-39-REAR RUNBOARD BRACKET
1	JULIAN-2-40-RUNBOARD+ STEPS
1	JULIAN-2-41-STEERING BRACKET MOUNT

QTY.	PART NUMBER
1	JULIAN-2-41-STEERING BRACKET MOUNT
1	JULIAN-2-42-LH STEERING BRACKET
1	JULIAN-2-43-RH STEERING BRACKET
1	JULIAN-2-44-WORM GEAR BUSH
1	JULIAN-2-45-REGULATOR STAND
1	JULIAN-2-46-STEAM SUPPLY CONNECTOR
1	JULIAN-2-47-LUBRICATOR BODY
1	JULIAN-2-48-STEAM SUPPLY PIPE
2	JULIAN-2-49-STEERING CHAIN ROLLER BEARING
1	JULIAN-2-50-SAFETY VALVE BODY
1	JULIAN-2-51-SAFETY VALVE BALL
1	JULIAN-2-52-SAFETY VALVE LIFTING STEM
1	JULIAN-2-53-SAFETY VALVE SPRING
1	JULIAN-2-54-SAFETY VALVE PRESSURE ADJUSTER
1	JULIAN-2-55-WATER FILLER NIPPLE
1	JULIAN-2-56-WATER LEVEL CHECK PIPE NIPPLE
3	JULIAN-2-57-WTR LVL CHECK PIPE NUT
1	JULIAN-2-58-WTR LVL CHECK PIPE
1	JULIAN-2-59-PRESSURE GAUGE NIPPLE
1	JULIAN-2-60-PRESSURE GAUGE
2	JULIAN-2-61-PRESSURE GAUGE PIPE NUT
1	JULIAN-2-62-PRESSURE GAUGE PIPE
1	JULIAN-2-63-OUTER CASING ROOF POLE
1	JULIAN-2-64-WTR LVL VALVE BODY
1	JULIAN-2-65-WTR LVL VALVE SPINDLE
1	JULIAN-2-66-WTR LVL VALVE SPINDLE NUT
1	JULIAN-2-67-WTR LVL DISCHARGE PIPE
1	JULIAN-2-68-WATER FILLER SCREW
1	JULIAN-2-69-FUEL TANK FILLER CAP SCREW
1	JULIAN-2-70-CHIMNEY INTERNAL MOUNTING PLATE
1	JULIAN-2-71-NAME PLATE

QTY.	PART NUMBER
1	JULIAN-3-01-CRANKSHAFT
1	JULIAN-3-02-CRANK DISC
1	JULIAN-3-03-CRANK PIN
1	JULIAN-3-04-CON-ROD
1	JULIAN-3-05-CROSSHEAD CENTER PLATE - Copy
2	JULIAN-3-06-CROSSHEAD SIDE PLATE
1	JULIAN-3-07-CROSSHEAD GUDGEON PIN
1	JULIAN-3-08-PISTON ROD
1	JULIAN-3-09-PISTON
1	JULIAN-3-10-VALVE ECCENTRIC
1	JULIAN-3-11-ECCENTRIC DRIVE COLLAR
1	JULIAN-3-12-ECCENTRIC STRAP
2	JULIAN-3-13-ECC STRAP+ VALVE SPINDLE YOKE
1	JULIAN-3-14-VALVE
1	JULIAN-3-15-VALVE ROD
1	JULIAN-3-16-VALVE ROCKER PLATE
1	JULIAN-3-17-THROTTLE HANDLE
1	JULIAN-3-18-THROTTLE CONTROL VALVE
1	JULIAN-3-19-THROTTLE PULL WIRE
2	JULIAN-3-20-FRONT WHEEL HUB
2	JULIAN-3-21-FRONT WHEEL RIM
32	JULIAN-3-22-FRONT WHEEL SPOKES
2	JULIAN-3-23-REAR WHEEL HUB
2	JULIAN-3-24-REAR WHEEL RIM
48	JULIAN-3-25-REAR WHEEL SPOKES
24	JULIAN-3-26A-REAR WHEEL GROUTER-LH
24	JULIAN-3-26B-REAR WHEEL GROUTER-RH
1	JULIAN-3-27-FLYWHEEL HUB
1	JULIAN-3-28-FLYWHEEL RIM
6	JULIAN-3-29-FLYWHEEL SPOKE
1	JULIAN-3-30-FLYWHEELOUTER RIM
1	JULIAN-3-31-FRONT WHEEL AXLE
1	JULIAN-3-32-REAR WHEEL AXLE
1	JULIAN-3-33-COUNTER SHAFT
1	JULIAN-3-34-FRONT AXLE FORK
1	JULIAN-3-35-FRONT AXLE FORK COLLAR
1	JULIAN-3-36-CRANKSHAFT GEAR WHEEL-Z=32
1	JULIAN-3-37-IDLER GEAR WHEEL Z=66
1	JULIAN-3-38-COUNTER SHAFT GEAR WHEEL Z=81
2	JULIAN-3-39-COUNTER SHAFT GEAR WHEELZ=16
2	JULIAN-3-40-REAR WHEEL GEAR WHEEL Z=120
6	JULIAN-3-41-REAR WHEEL SPACER
2	JULIAN-3-42-REAR WHEELAXLE SPACER
1	JULIAN-3-43-STEERING COLUMN
1	JULIAN-3-44-STEERING WHEEL
1	JULIAN-3-45-STEERING GEAR WHEELZ=20
1	JULIAN-3-46-STEERING CHAIN ROLLER
1	JULIAN-3-47-STEERING CHAIN ROLLER COLLAR
1	JULIAN-3-48-STEERING WORM GEAR

QTY.	PART NUMBER
2	JULIAN-3-49-STEERING CHAIN LUG
1	JULIAN-3-50-STEERING CHAIN
1	JULIAN-3-51-STEERING CHAIN
2	JULIAN-3-52-CONTROL LEVER COLLAR
1	JULIAN-3-53-ECCENTRIC STRAP GUIDE SCREW
2	JULIAN-3-54-YOKE GUDGEON PIN
1	JULIAN-3-55-VALVE ROCKER GUDGEON PIN
1	JULIAN-3-56-REGULATOR PRESSURE SPRING
2	JULIAN-3-57-GEAR WHEEL KEYS
2	JULIAN-3-57-GEAR WHEEL KEYS
2	JULIAN-3-58-COUNTER SHAFT COLLAR

QTY.	PART NUMBER
1	JULIAN-BASE FLOOR
2	JULIAN-M3 NUT
2	JULIAN-M3x10 A-K ROUND HEAD SCREW
9	JULIAN-M4 NUT
1	JULIAN-M4 WASHER
8	JULIAN-M4x3-COUNTER SINK RIVET
3	JULIAN-M4x4.5-ROUND HEAD RIVET
94	JULIAN-M4x4-ROUND HEAD RIVET
2	JULIAN-M4x5-ROUND HEAD RIVET
14	JULIAN-M4x6 A-K ROUND HEAD SCREW
16	JULIAN-M4x6-ROUND HEAD RIVET
2	JULIAN-M4x8 A-K ROUND HEAD SCREW
7	JULIAN-M4x8 GRUB SREW
14	JULIAN-M4x10 A-K ROUND HEAD SCREW
10	JULIAN-M4x10-ROUND HEAD RIVET
26	JULIAN-M4x11-ROUND HEAD RIVET
28	JULIAN-M4x12 A-K ROUND HEAD SCREW
7	JULIAN-M4x30 A-K ROUND HEAD SCREW
1	JULIAN-M4x35 THREADED ROD
7	JULIAN-M5 NUT
96	JULIAN-M5x7-COUNTER SINK RIVET
5	JULIAN-M5x10 A-K ROUND HEAD SCREW
14	JULIAN-M5x16 A-K ROUND HEAD SCREW
13	JULIAN-M6 NUT
6	JULIAN-M6x4.5-ROUND HEAD RIVET
2	JULIAN-M6x4-ROUND HEAD RIVET
2	JULIAN-M6x6.5 GRUB SREW
9	JULIAN-M6x12 A-K ROUND HEAD SCREW
2	JULIAN-M6x26 GRUB SREW
1	JULIAN-M6x35 A-K ROUND HEAD SCREW
1	JULIAN-M8 NUT
2	JULIAN-M10 CIRCLIP

NOTES:
1. ALL ENGINEERING PRACTICES SHALL BE APPLIED WITH REGARDS TO HOLE AND SHAFT TOLERANCES.
2. WHERE SCREWS OR BOLTS ARE USED THE CLEARANCE HOLES SHALL BE APPROXIMATELY 5% TO 8% LARGER THAN THE MATCHING TAPPED HOLE.
3. PREFERABLY ALL TAPPED HOLES AND MATCHING SCREWS AND/OR BOLTS TO BE METRIC FINE (MF)
4. MATERIALS SPECIFIED ON THE DRAWINGS ARE INDICATIVE ONLY. THE BUILDER CAN MAKE HIS/HER OWN MATERIAL CHOICE.
5. INQUIRE AT THE APPROPRIATE AUTHORITIES WHETHER OR NOT THIS BOILER REQUIRES A PRESSURE TEST CERTIFICATE.
6. ALL CONNECTIONS/JOINTS WHICH HAVE STEAM PRESSURE APPLIED TO IT SHALL BE SILVER/HARD SOLDERED.
7. COMPRESSION SPRINGS ARE DRAWN IN COMPRESSED STATE (CP), UNCOMPRESSED STATE IS APPROX 40% TO 60% LONGER THEN COMPRESSED STATE.
8. WHERE PREFERRED SCREW OR RIVETED CONNECTIONS CAN BE OMITTED AND PARTS CAN BE BONDED TOGETHER BY USING EITHER HIGH STRENGTH GLUE, EPOXY RESIN, OR SOLDER.
9. PARTS WHICH ARE DIRECTLY EXPOSED TO STEAM AND/OR WATER SHOULD BE CONSTRUCTED USING NON-FERROUS OR NON CORROSIVE MATERIAL SUCH AS BRASS, BRONZE, GUNMETAL, STAINLESS STEEL, COPPER OR MONEL.
10. THE ORDER IN WHICH THE PARTS/COMPONENTS ARE MANUFACTURED AND THE MODEL IS ASSEMBLED IS ENTIRELY LEFT TO THE BUILDER/MODEL MAKER.
11. SEALS/GASKETS SHALL BE INSTALLED WHERE DEEMED NECESSARY
12. ERRORS AND/OR OMISSIONS MAY OCCUR IN THE DRAWINGS, DO NOT HESITATE TO CONTACT ME SO THAT THE ERRORS/OMISSIONS CAN BE RECTIFIED.

MATERIAL ABBREVIATIONS:
ALU = ALUMINIUM
BRS = BRASS
BRZ = BRONZE OR GUNMETAL (BRZ/GM)
CI = CAST IRON
CU = COPPER
GRA = GRAPHITE
MS = MILD STEEL/BRIGHT MILD STEEL
S/S = SILVER STEEL OR STAINLESS STEEL
SPS = SPRING STEEL
SYN = SYNTHETIC MATERIAL SUCH AS VETON, NYLON, TEFLON OR RUBBER IN GENERAL SYNTHETIC MATERIALS SOULD BE ABLE TO WITHSTAND THE HEAT AND PRESSURE(S) APPLIED TO THEM.

OTHER ABBREVIATIONS
PF = PRESS FIT
PCD = PITCH CIRCLE DIAMETER
RM = REAM
HEX = HEXAGON, 6SIDED
CP = COMPRESSED
KNL = KNURLED
SA-n-xxx = SUB ASSEMBLY-n-xxx

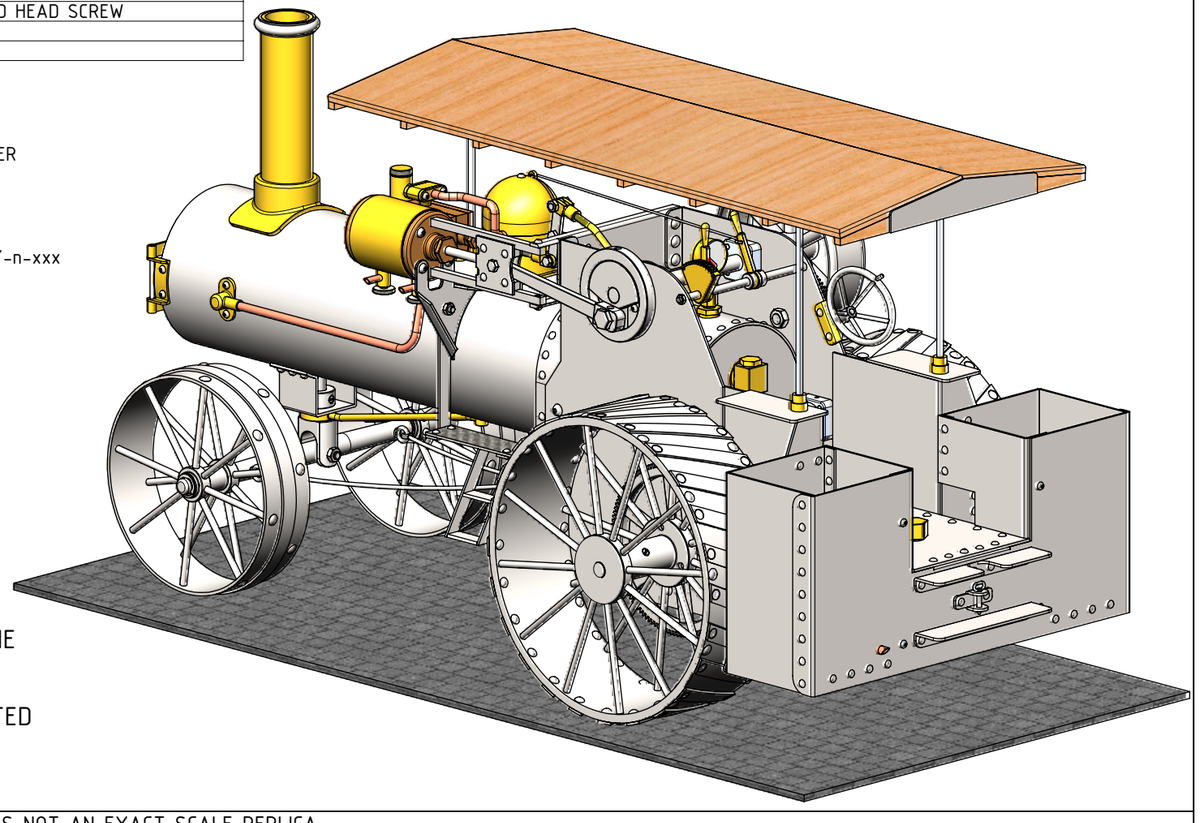

IMPORTANT:
THE SAFE MAXIMUM WORKING STEAM PRESSURE FOR THIS MODEL IS 50PSI (3.45BAR)
THE BOILER SHOULD TESTED TO TWICE THE WORKING PRESSURE.
THE SAFETY VALVE SHOULD BE CALIBRATED TO THE MAXIMUM WORKING PRESSURE

NOTES: THIS MODEL TRACTION ENGINE IS LOOSLY BASED ON UPON THE FULL-SIZE TRACTORS FORMERLY BUILT BY THE J. I. CASE CO. BUT IS NOT AN EXACT SCALE REPLICA

TITLE
KEROSINE FIRED MODEL STEAM TRACTION ENGINE CALLED "JULIAN"

DRAWING CONTENTS
ISOMETRIC VIEW, BILL OF MATERIALS AND NOTES

PROJECT No 08-07-00
JDW DRAUGHTING SERVICES
J.A.M. DE WAAL. 12 BRIGHTWELL STREET PAPAKURA 2110. NEW ZEALAND. PHONE: 0064 09 2988815. MOB: 0211791000
E-MAIL: dewaal@xtra.co.nz.

PROJECTION JDWDS
DATE JUNE-2015

MODEL SCALE: 1:1
DWG SCALE: NTS @A3 OR AS SHOWN
Copyright © J.A.M. DE WAAL PAPAKURA NZ

A3 No: JULIAN-02

RH-SIDE ONLY
SCALE 1:3
1-01
RIGHTHAND SIDE
1-02
LEFTHAND SIDE
MIRROR IMAGE OF 1-01
1-03
SCALE 1:2
1-04
1-05
LEFTHAND SIDE
RIGHTHAND SIDE
SCALE 1:3
1-07
2mm THICK
SCALE 1:3
LH-SIDE
1-10A
RH-SIDE
1-10B
MIRROR IMAGE OF 1-10A
1-14
2mm THICK
1-08
OPPOSITE FACE EQUAL
SCALE 1:3
MIRROR IMAGE OF 1-05
SCALE 1:2.5
1-11B
RH-SIDE
MIRROR IMAGE OF 1-11A
1-12
1-13
SCALE 1:2
1-17
BRS
1-09B
RH-SIDE
MIRROR IMAGE OF 1-09A
1-16
1-18
SCALE 1:2.5
1-09A
LH-SIDE
AKE OVER FROM 1-08
AKE OVER FROM 1-08
SCALE 1:3
1-11A
SCALE 1:3
1-15
ALU
1-19
BRS 1.5
SCALE 1:2
1-20
BRS
1-24
GLUE OR SOLDER
ALU
SCALE 1:2
BRS

NOTES: THIS MODEL TRACTION ENGINE IS LOOSLY BASED ON UPON THE FULL-SIZE TRACTORS FORMERLY BUILT BY THE J. I. CASE CO. BUT IS NOT AN EXACT SCALE REPLICA

PLEASE NOTE DRAWING SCALE IS 1:1.5

TITLE
KEROSINE FIRED MODEL STEAM TRACTION ENGINE CALLED "JULIAN"

DRAWING CONTENTS
PARTS AND ASSEMBLIES

PROJECT No 08-07-00
JDW DRAUGHTING SERVICES
J.A.M. DE WAAL. 12 BRIGHTWELL STREET PAPAKURA 2110. NEW ZEALAND. PHONE: 0064 09 2988815. MOB: 0211791000
E-MAIL: dewaal@xtra.co.nz.

PROJECTION JDWDS
DATE JUNE-2015
SHEET: 03 OF 10

MODEL SCALE: 1:1
DWG SCALE: 1:1.5 @A3 OR AS SHOWN
Copyright © J.A.M. DE WAAL PAPAKURA NZ
A3 No: JULIAN-03

BRS
CU
1-21A
R6
73.5
73.5
129
R2
128.2
531mm LONG SCALE 1:3
1-27
WOOD
5
CU
Ø77
Ø6
2-02
SCALE 1:2.5
182
50
145
29
Ø19
Ø19
Ø19
Ø77
Ø83
2-01
CU
43.5
13
43.5
16
51
Ø9
25
25
6
SCALE 1:2.5
1
11
67.5
67.5
11
TUBE 6x5
51
2
WOOD
1-28A
Ø25
Ø77
22
30
Ø6
Ø13
5mm THICK
SCALE 1:2.5
CU
Ø22
M10
3
6.5
Ø19
2-04
BRZ
Ø9 6PL
Ø6 4PL
9.5
9.5
19
19
136
129
125
SCALE 1:3
WICK MATERIAL
CU
BRS
1-22
Ø36.5
Ø32.5
144
TUBE 9x7
2
45
52
2
SCALE 1:2.5
Ø5
11.2
12.8
6
6
15.5
53.5
9
1-28B
MIRROR IMAGE
REFER 1-28A
WOOD
Ø16
Ø10
3
6.5
Ø13
2-05B
BRZ
Ø29
M16
3
6.5
Ø25
2-05A
BRZ
R38.5
12.5
254
TUBE 6x5
14
2-11
CU
12
396
12
M6
M6
Ø8
2-06
BRZ
CU
MIRROR
IMAGE
OF 2-08
CU
2-09
BRZ
CU
2-07
125
R2.5
TUBE 9x7
R11.5
18.2
23.5
SCALE 1:2
2-08
125
R2.5
TUBE 9x7
R11.5
21.9
25.5
R38.5
20.3
SCALE 1:2
188
REFER TO 1-22
1-23
22
21.2
9
21.2
6
6
Ø5
15.5
53.5
1-28C
WOOD
(543)
73
243
50
33.5
111.5
27.5
4.5
32
Ø5
32
32
32
M4
12
12
Ø4
Ø19
M4
22
22
M4
15
Ø4
15
Ø4
2
58
58
10
OPPOSITE
FACE
EQUAL
Ø4
127
127
22
5.3
5.3
6mm THICK SCALE 1:3
WOOD
1-25
1-26
MS
5
16
8
19HEX
M8
Ø10
1-29
MS
76
76
R3
26
R3
16
16
1.5mm THICK SCALE 1:2
15.5
R60
13
7
8
Ø4
77
127.5
16
46.5
46.5
47.5
47.5
SCALE 1:3
7x16=112
16
6
5.5
2
85
14
R12
19
19
19
19
R12
10
21
Ø4
SCALE 1:2
1-30
MS
MS
1-31
MIRROR IMAGE
OF 1-30
299.5
F
F
13 HOLES EQUAL
SPACED ON
CIRCUMFERENCE
Ø120
Ø102
9.5
9.5
M4
M4
12
11
11
73
12
12
G
G
105
170
M5
60
6
148
SCALE 1:3
2-10
MS
M5
42.50°
20°
20°
M5
M5
SECTION F-F
SCALE 1 : 3
M4
Ø12
M4
25°
25°
SECTION G-G
SCALE 1 : 3
BRS
2-21
15.5
3.5
Ø3
1.5
15
R60
15
Ø4
9.5
9.5
6.7
9
4

NOTES: THIS MODEL TRACTION ENGINE IS LOOSLY BASED ON UPON THE FULL-SIZE TRACTORS FORMERLY BUILT BY THE J. I. CASE CO. BUT IS NOT AN EXACT SCALE REPLICA

PLEASE NOTE DRAWING SCALE IS 1:1.5

TITLE
KEROSINE FIRED MODEL STEAM TRACTION ENGINE CALLED "JULIAN"

DRAWING CONTENTS
PARTS AND ASSEMBLIES

PROJECT No 08-07-00

JDW DRAUGHTING SERVICES
J.A.M. DE WAAL. 12 BRIGHTWELL STREET PAPAKURA 2110. NEW ZEALAND. PHONE: 0064 09 2988815. MOB: 0211791000
E-MAIL: dewaal@xtra.co.nz.

PROJECTION | JDWDS

DATE JUNE-2015

MODEL SCALE: 1:1

DWG SCALE: 1:1.5 @A3 OR AS SHOWN

Copyright © J.A.M. DE WAAL PAPAKURA NZ

SHEET: 04 OF 10 | A3 | No: JULIAN-04

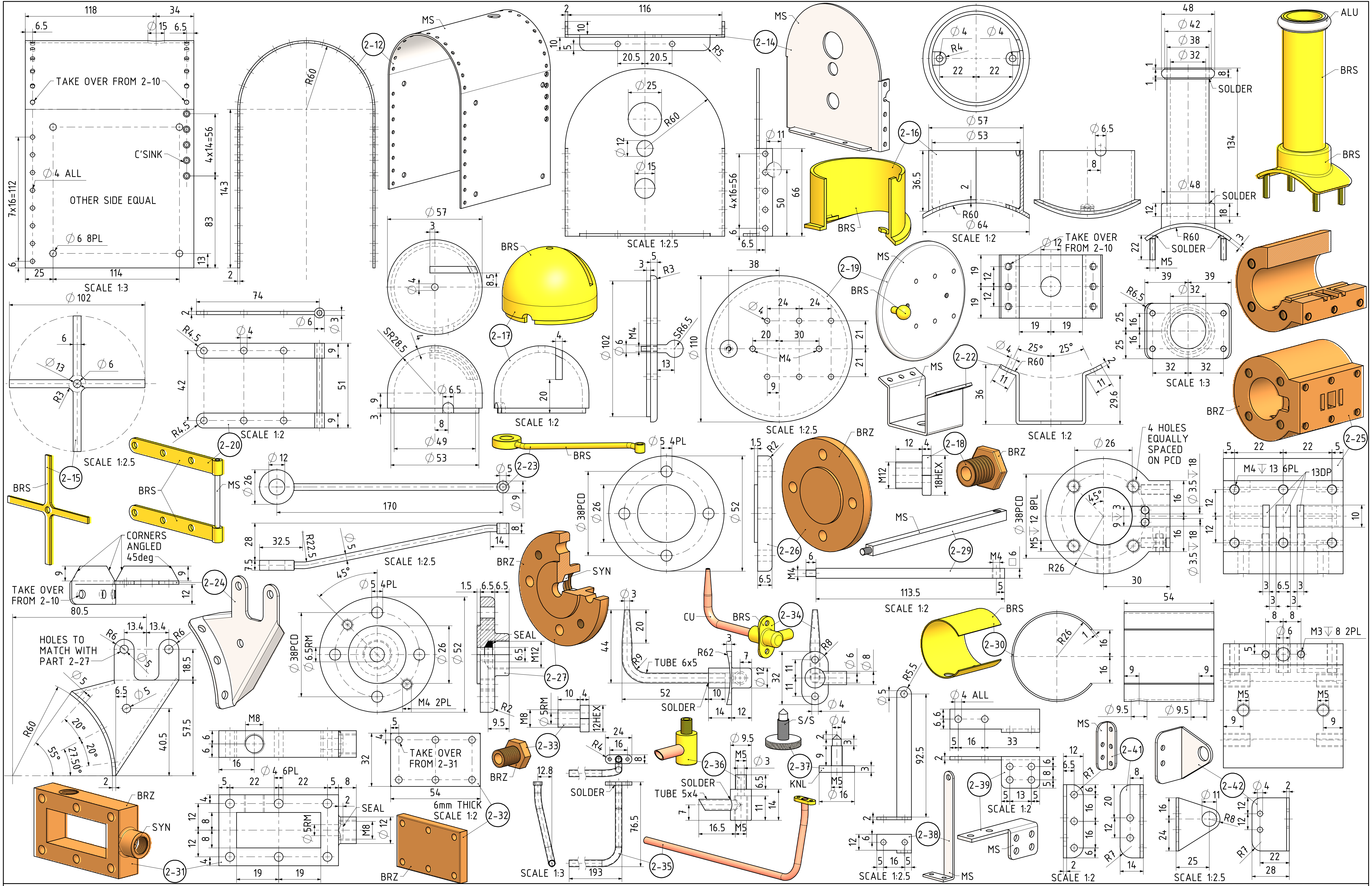

NOTES: THIS MODEL TRACTION ENGINE IS LOOSLY BASED ON UPON THE FULL-SIZE TRACTORS FORMERLY BUILT BY THE J. I. CASE CO. BUT IS NOT AN EXACT SCALE REPLICA

PLEASE NOTE DRAWING SCALE IS 1:1.5

TITLE

KEROSINE FIRED MODEL STEAM TRACTION ENGINE CALLED "JULIAN"

DRAWING CONTENTS

PARTS AND ASSEMBLIES

PROJECT No 08-07-00

JDW DRAUGHTING SERVICES
J.A.M. DE WAAL. 12 BRIGHTWELL STREET PAPAKURA 2110. NEW ZEALAND. PHONE: 0064 09 2988815. MOB: 0211791000
E-MAIL: dewaal@xtra.co.nz

PROJECTION

JDWDS

DATE JUNE-2015

SHEET: 05 OF 10

MODEL SCALE: 1:1

DWG SCALE: 1:1.5 @A3 OR AS SHOWN

Copyright © J.A.M. DE WAAL PAPAKURA NZ

A3 No: JULIAN-05

NOTES: THIS MODEL TRACTION ENGINE IS LOOSLY BASED ON UPON THE FULL-SIZE TRACTORS FORMERLY BUILT BY THE J. I. CASE CO. BUT IS NOT AN EXACT SCALE REPLICA

PLEASE NOTE DRAWING SCALE IS 1:1.5

TITLE

KEROSINE FIRED MODEL STEAM TRACTION ENGINE CALLED "JULIAN"

DRAWING CONTENTS

PARTS AND ASSEMBLIES

PROJECT No 08-07-00

SCALE 1 : 2.5

JDW DRAUGHTING SERVICES
J.A.M. DE WAAL. 12 BRIGHTWELL STREET PAPAKURA 2110.
NEW ZEALAND. PHONE: 0064 09 2988815. MOB: 0211791000
E-MAIL: dewaal@xtra.co.nz.

PROJECTION JDWDS

DATE JUNE-2015

MODEL SCALE: 1:1

DWG SCALE: 1:1.5 @A3 OR AS SHOWN

Copyright © J.A.M. DE WAAL PAPAKURA NZ

SHEET: 06 OF 10

A3

No: JULIAN-06

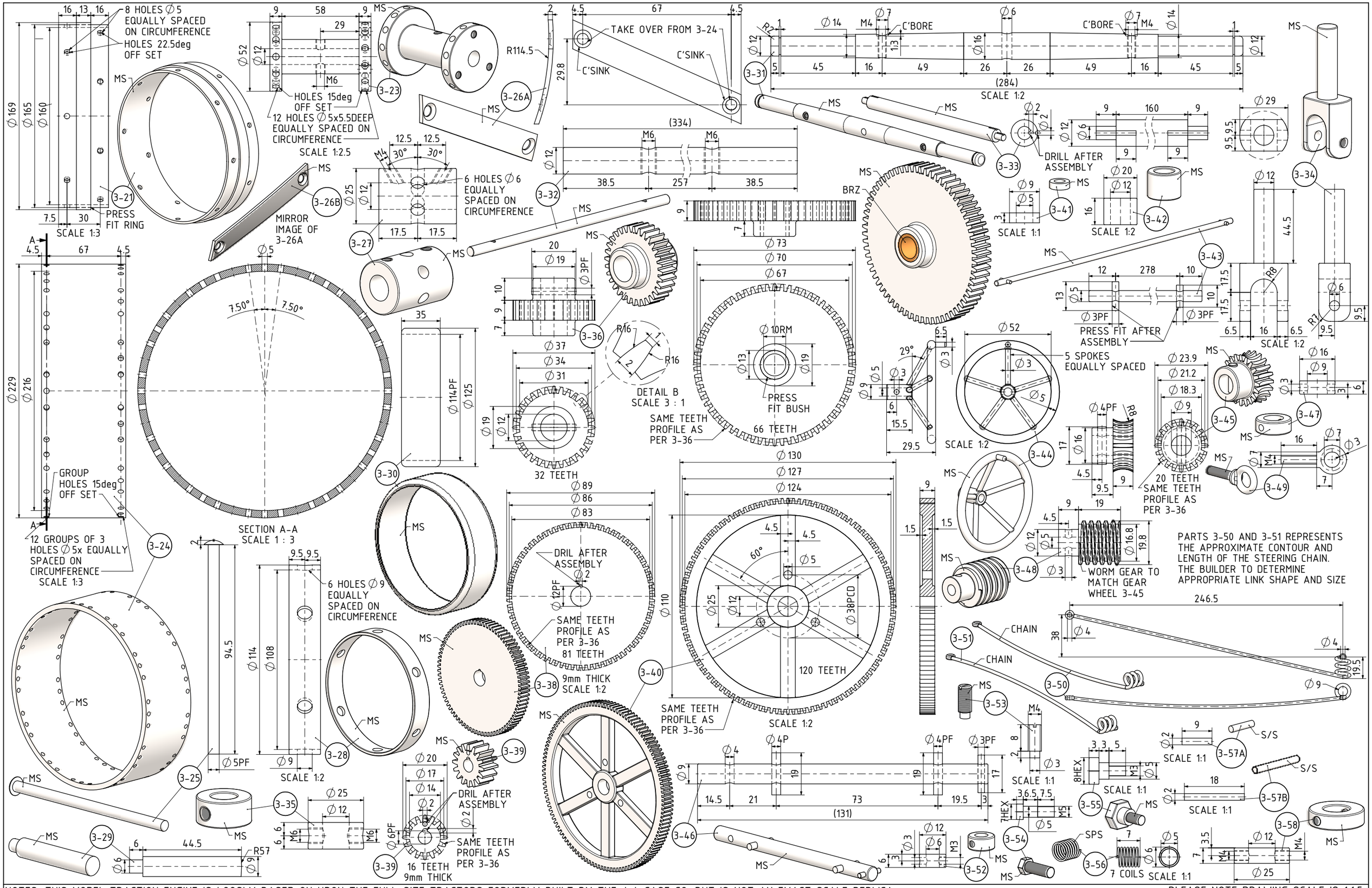

NOTES: THIS MODEL TRACTION ENGINE IS LOOSLY BASED ON UPON THE FULL-SIZE TRACTORS FORMERLY BUILT BY THE J. I. CASE CO. BUT IS NOT AN EXACT SCALE REPLICA

PLEASE NOTE DRAWING SCALE IS 1:1.5

TITLE

KEROSINE FIRED MODEL STEAM TRACTION ENGINE CALLED "JULIAN"

DRAWING CONTENTS

PARTS AND ASSEMBLIES

PROJECT No 08-07-00

JDW DRAUGHTING SERVICES
J.A.M. DE WAAL. 12 BRIGHTWELL STREET PAPAKURA 2110. NEW ZEALAND. PHONE: 0064 09 2988815. MOB: 0211791000
E-MAIL: dewaal@xtra.co.nz.

PROJECTION JDWDS

DATE JUNE-2015

SHEET: 07 OF 10

MODEL SCALE: 1:1

DWG SCALE: 1:1.5 @A3 OR AS SHOWN

Copyright © J.A.M. DE WAAL PAPAKURA NZ

A3 No: JULIAN-07

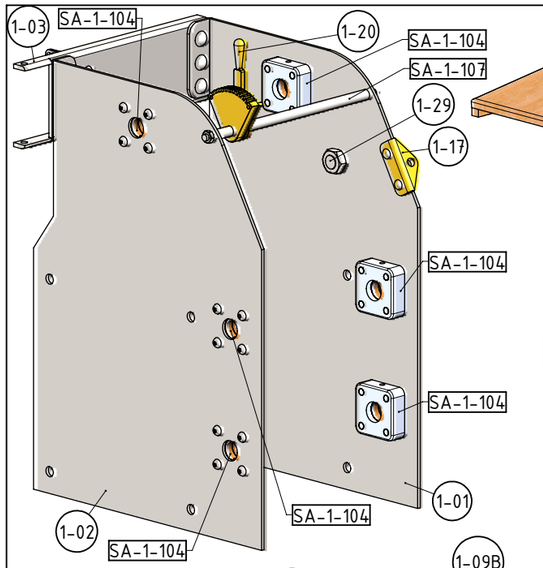

SA-1-101

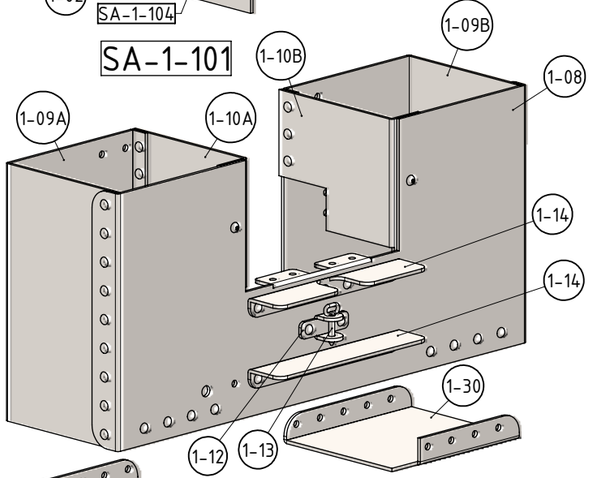

SA-1-103

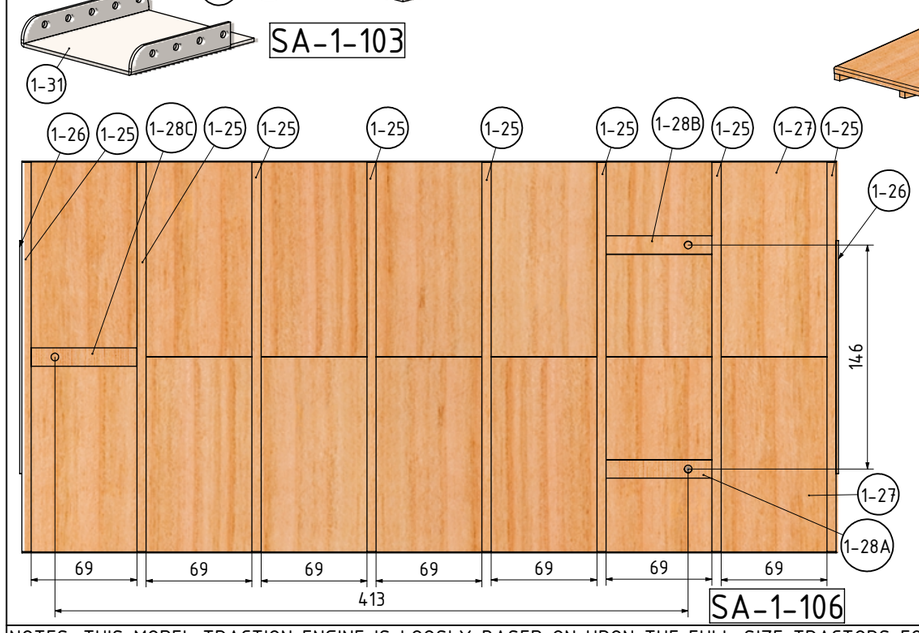

SA-1-106

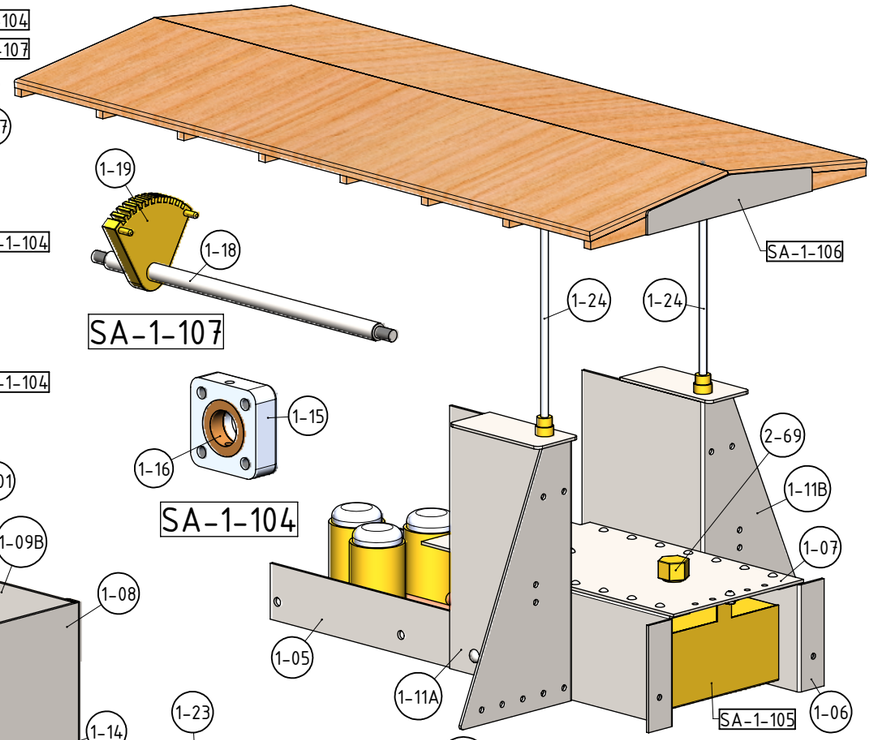

SA-1-102

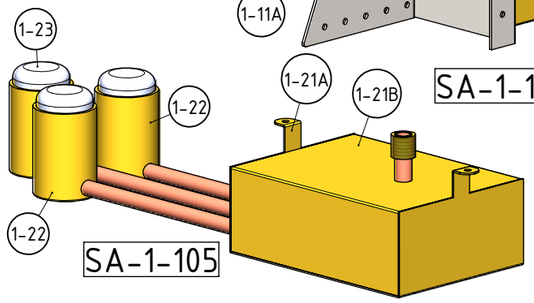

SA-1-105

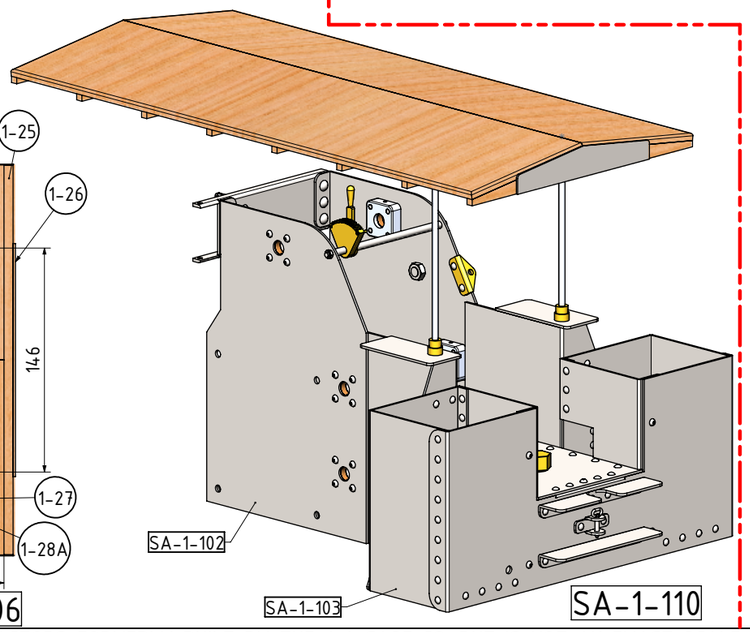

SA-1-110

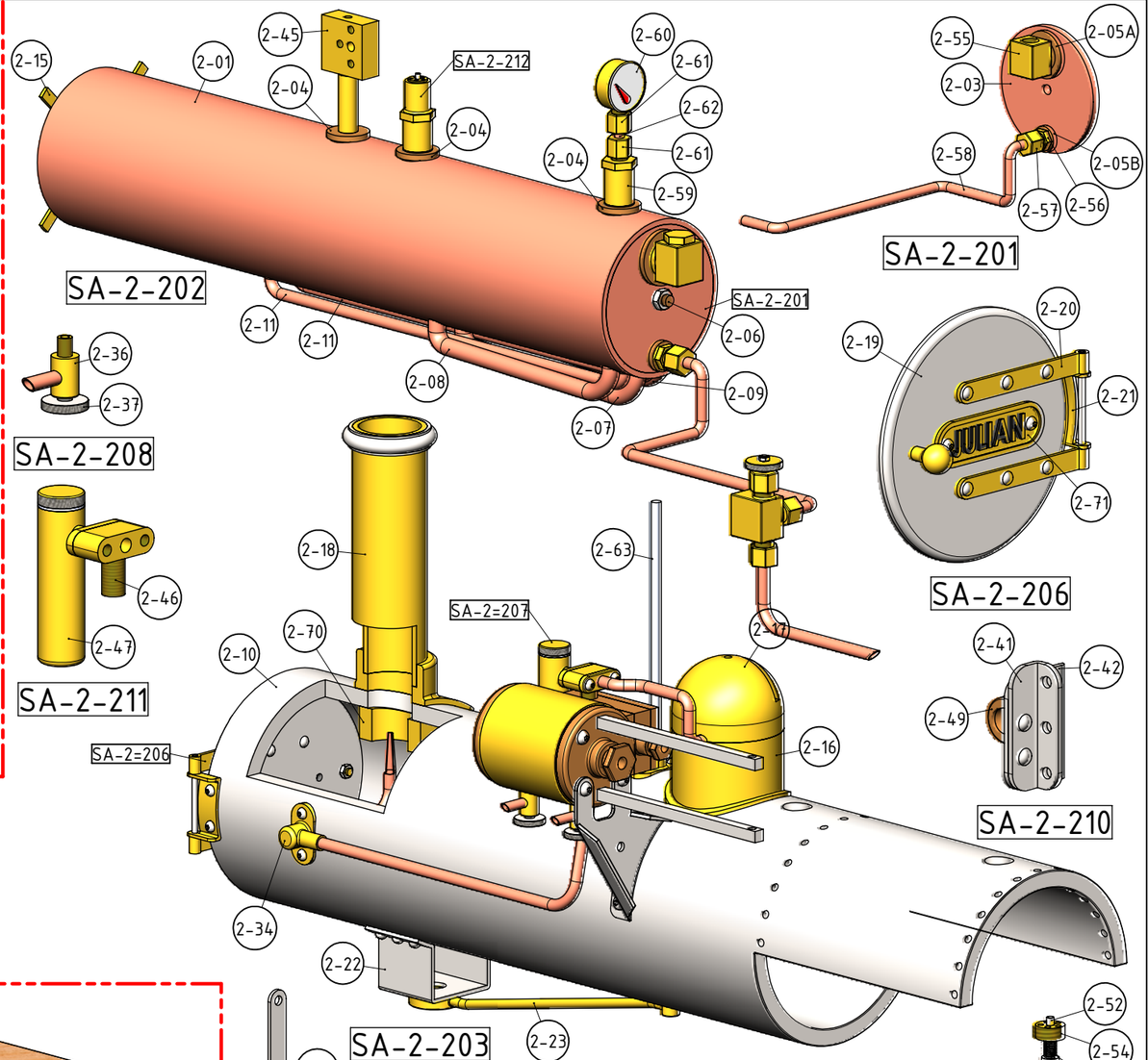

SA-2-202

SA-2-201

SA-2-206

SA-2-208

SA-2-211

SA-2-203

SA-2-210

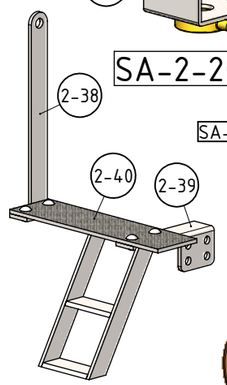

SA-2-209

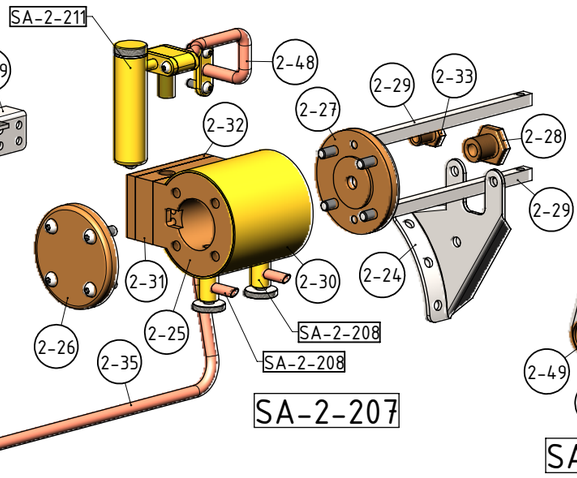

SA-2-207

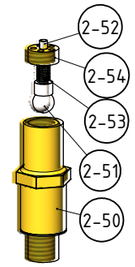

SA-2-212

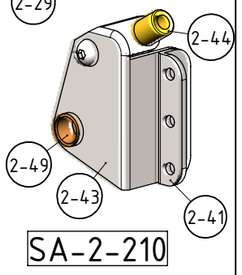

SA-2-210

NOTES: THIS MODEL TRACTION ENGINE IS LOOSLY BASED ON UPON THE FULL-SIZE TRACTORS FORMERLY BUILT BY THE J. I. CASE CO. BUT IS NOT AN EXACT SCALE REPLICA

TITLE
KEROSINE FIRED MODEL STEAM TRACTION ENGINE CALLED "JULIAN"

DRAWING CONTENTS
PARTS AND ASSEMBLIES

PROJECT No 08-07-00
JDW DRAUGHTING SERVICES
J.A.M. DE WAAL. 12 BRIGHTWELL STREET PAPAKURA 2110.
NEW ZEALAND. PHONE: 0064 09 2988815. MOB: 0211791000
E-MAIL: dewaal@xtra.co.nz.

PROJECTION JDWDS
DATE JUNE-2015
SHEET: 08 OF 10

MODEL SCALE: 1:1
DWG SCALE: NTS @A3 OR AS SHOWN
Copyright © J.A.M. DE WAAL PAPAKURA NZ
A3 No: JULIAN-08

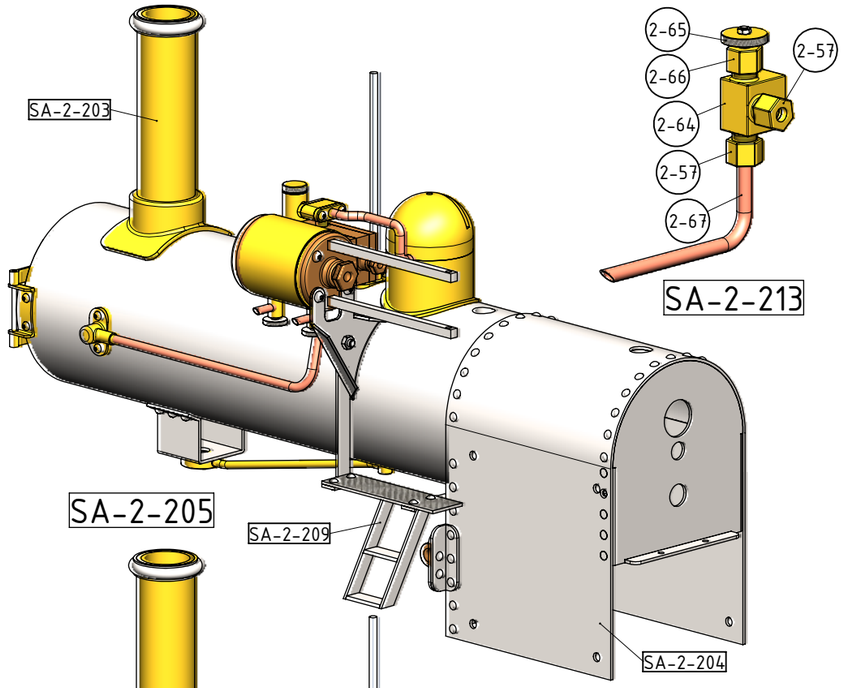

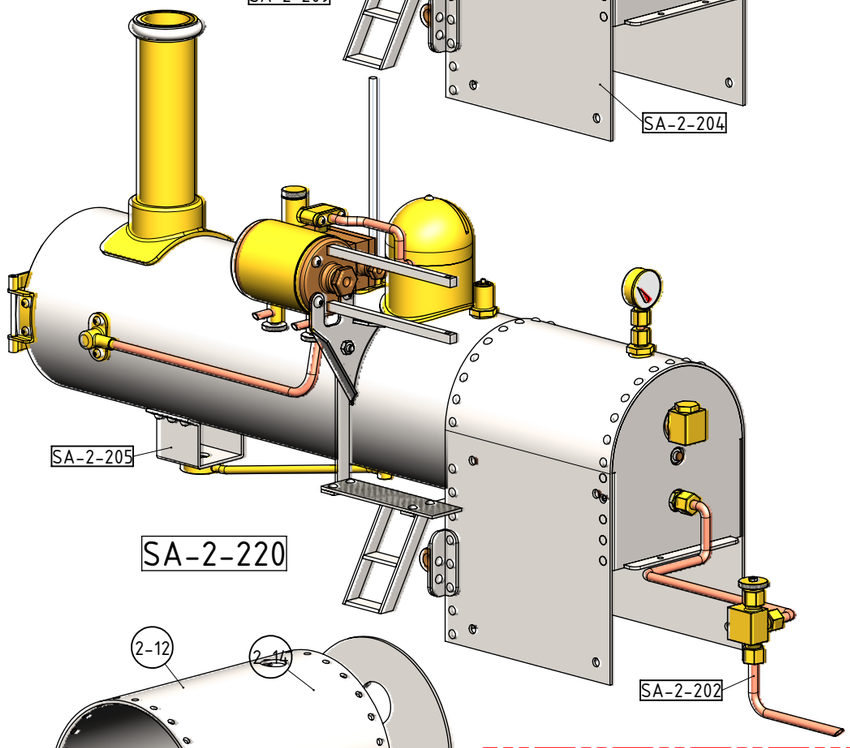

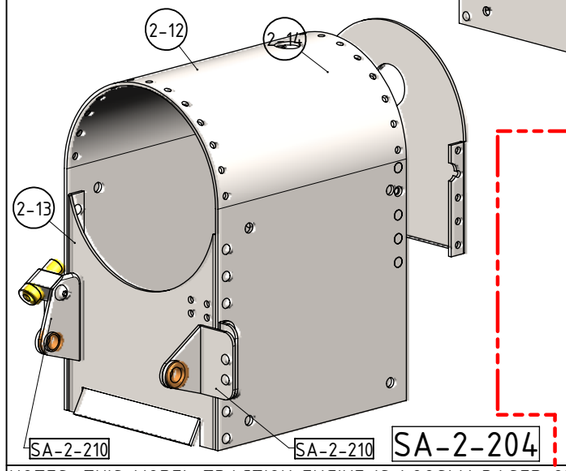

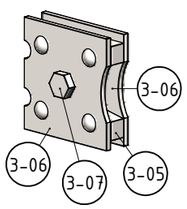

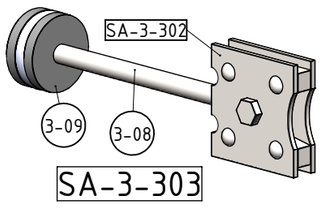

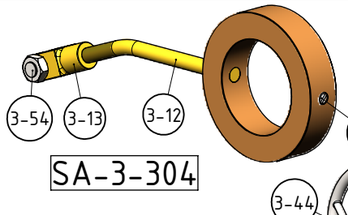

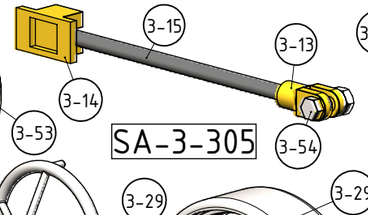

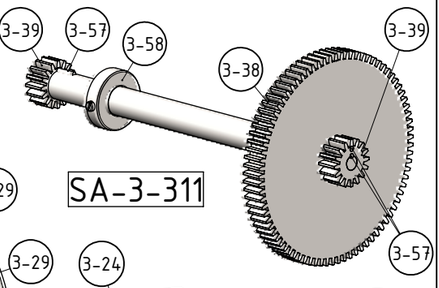

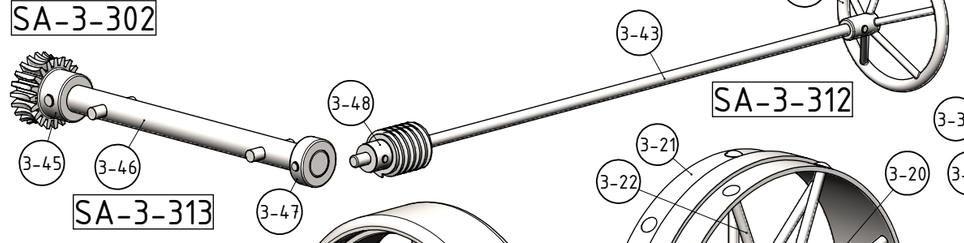

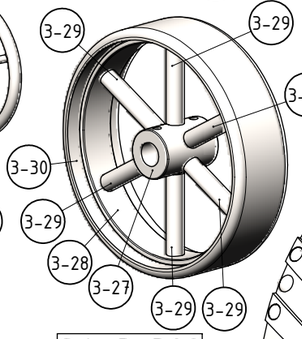

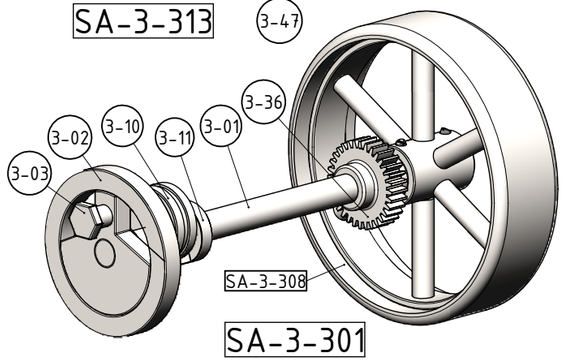

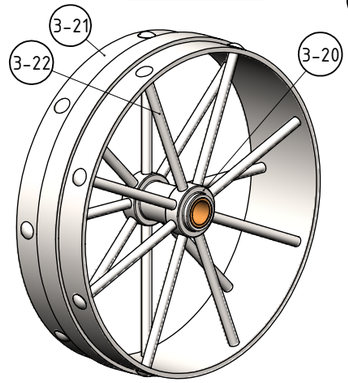

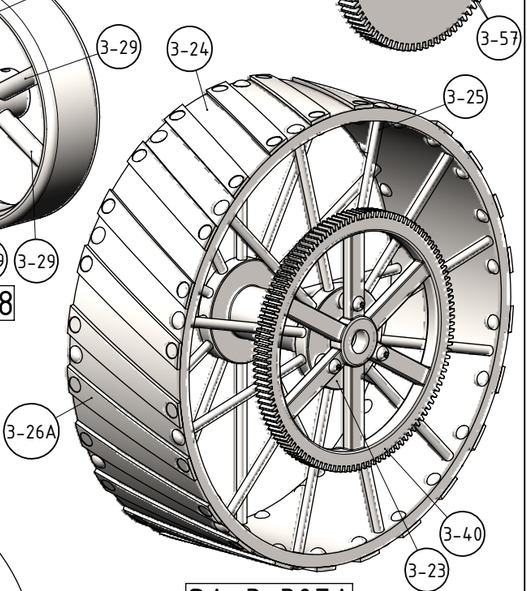

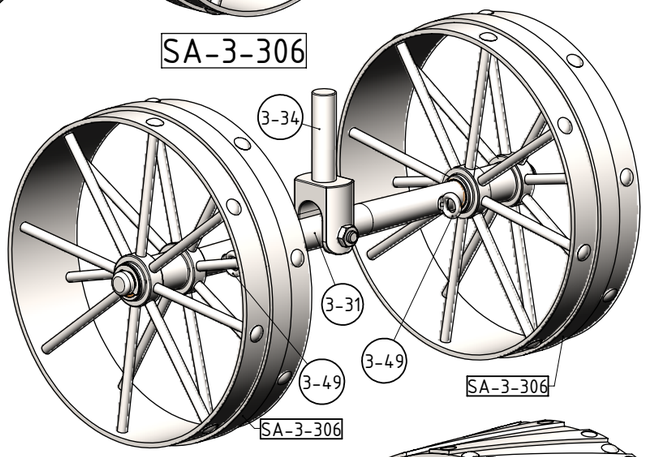

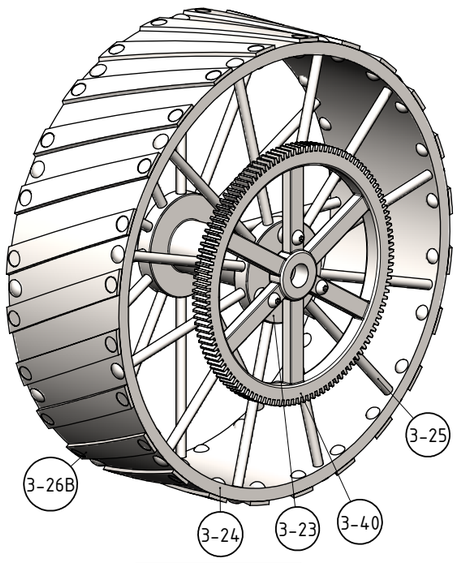

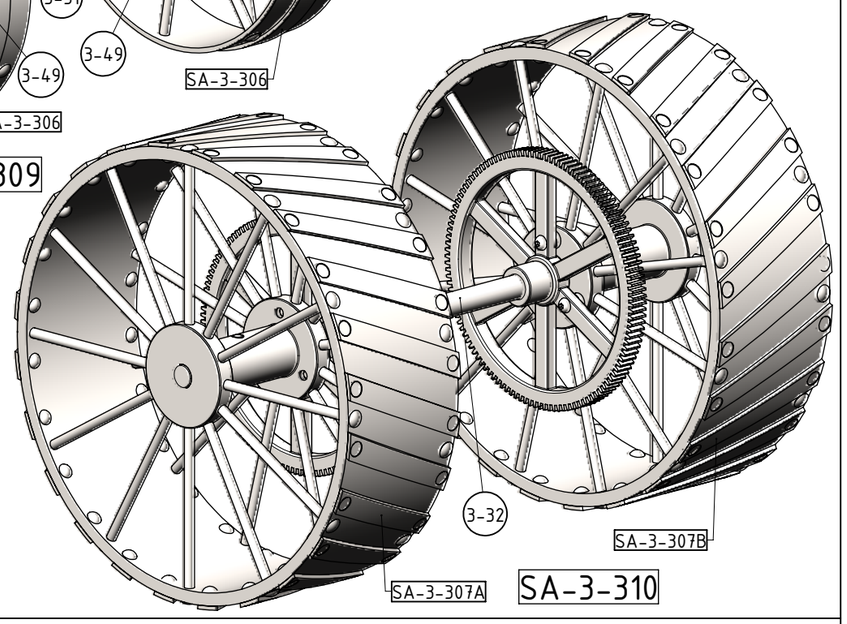

NOTES: THIS MODEL TRACTION ENGINE IS LOOSLY BASED ON UPON THE FULL-SIZE TRACTORS FORMERLY BUILT BY THE J. I. CASE CO. BUT IS NOT AN EXACT SCALE REPLICA

TITLE
KEROSINE FIRED MODEL STEAM TRACTION ENGINE CALLED "JULIAN"

DRAWING CONTENTS
PARTS AND ASSEMBLIES

PROJECT No 08-07-00

JDW DRAUGHTING SERVICES
J.A.M. DE WAAL. 12 BRIGHTWELL STREET PAPAKURA 2110.
NEW ZEALAND. PHONE: 0064 09 2988815. MOB: 0211791000
E-MAIL: dewaal@xtra.co.nz.

PROJECTION JDWDS

DATE JUNE-2015

SHEET: 09 OF 10

MODEL SCALE: 1:1

DWG SCALE: NTS @A3 OR AS SHOWN

Copyright © J.A.M. DE WAAL PAPAKURA NZ

A3 | No: JULIAN-09

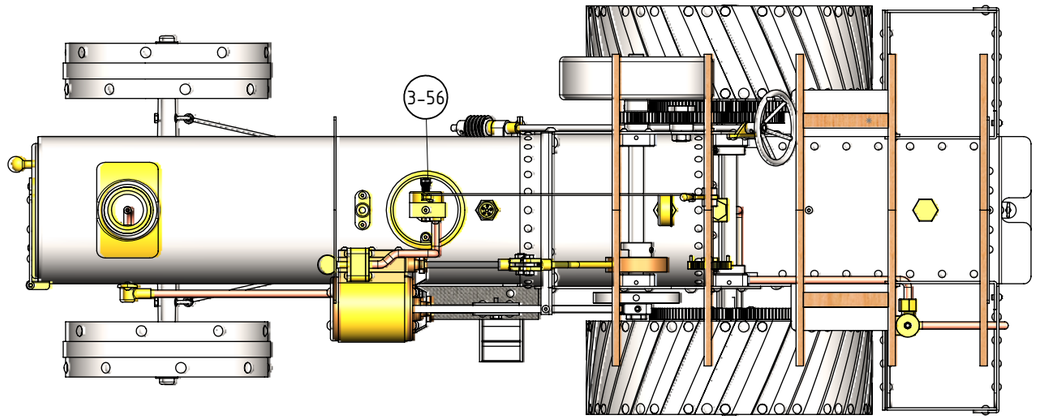

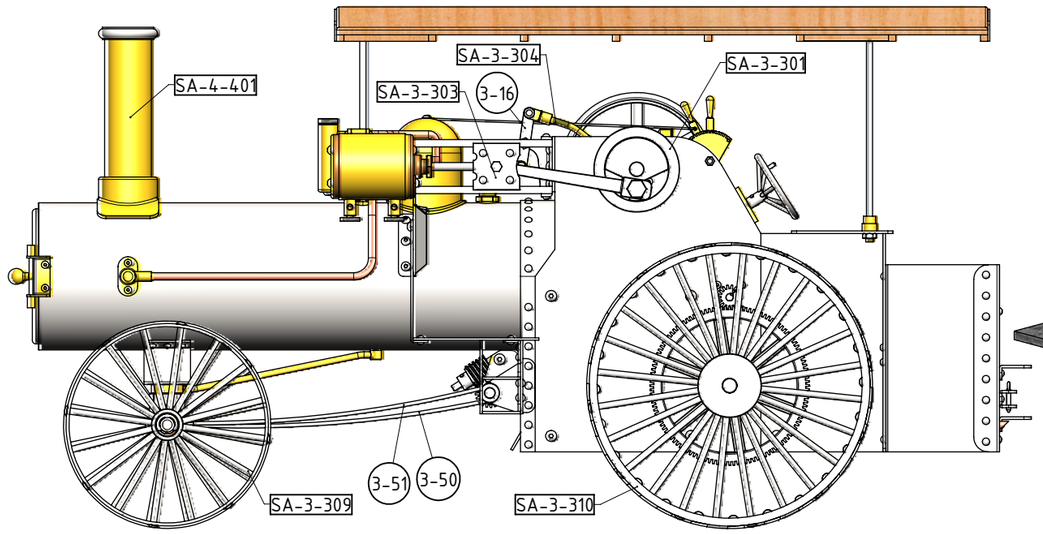

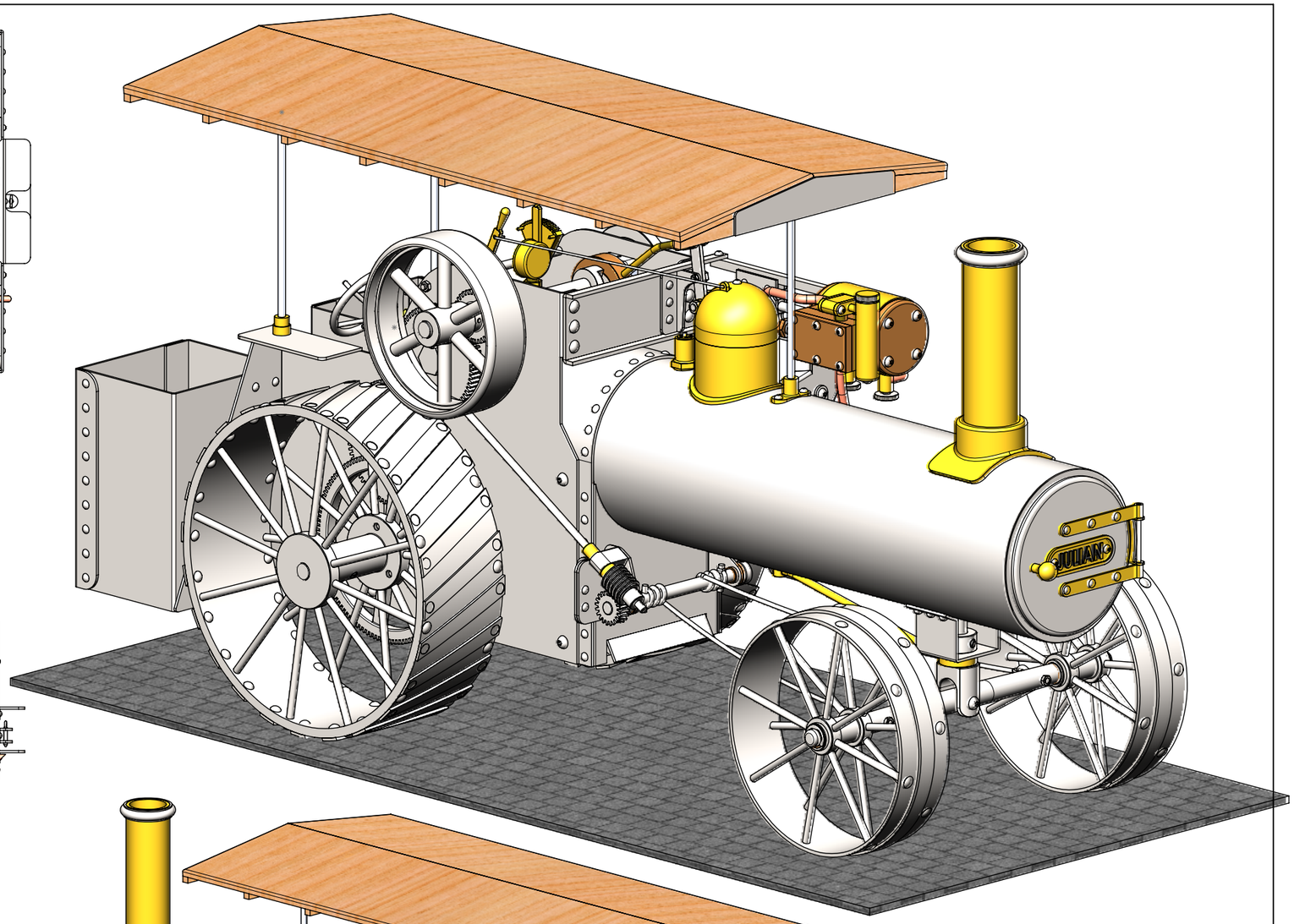

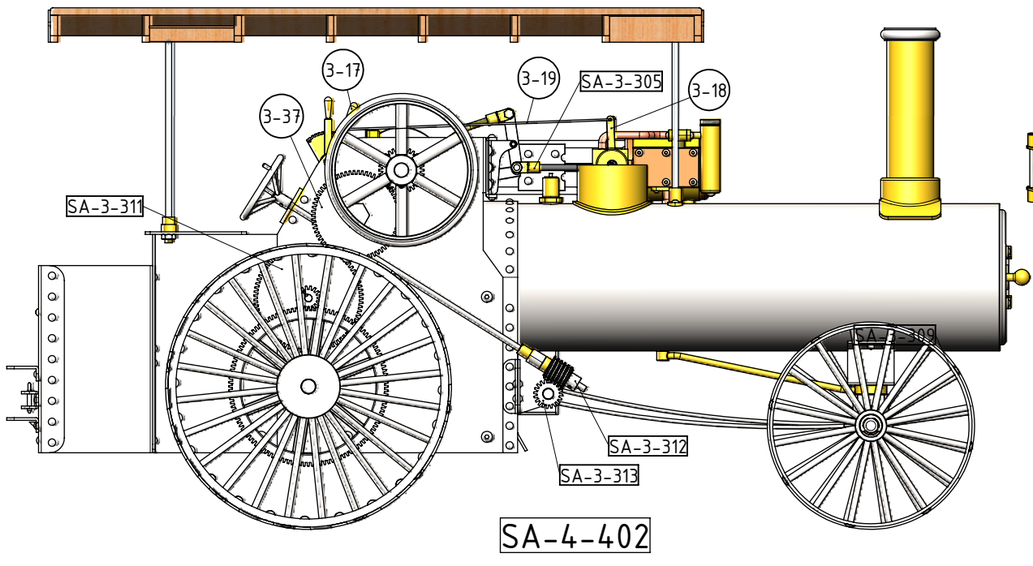

SA-4-402

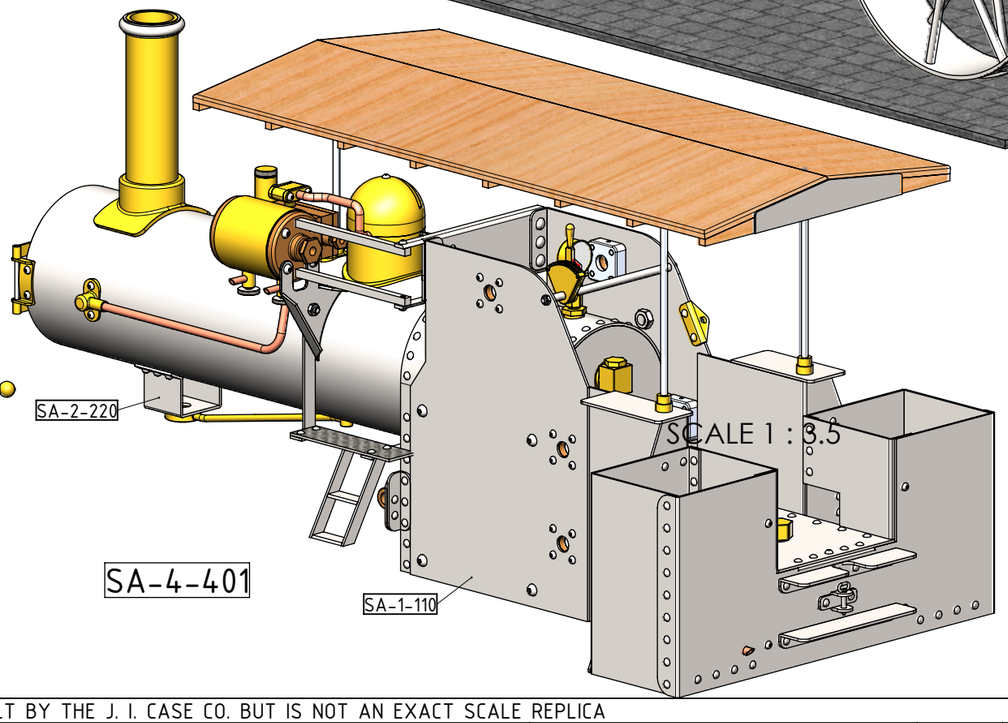

SA-4-401

SCALE 1 : 3.5

NOTES: THIS MODEL TRACTION ENGINE IS LOOSLY BASED ON UPON THE FULL-SIZE TRACTORS FORMERLY BUILT BY THE J. I. CASE CO. BUT IS NOT AN EXACT SCALE REPLICA

TITLE
KEROSINE FIRED MODEL STEAM TRACTION ENGINE CALLED "JULIAN"

DRAWING CONTENTS
PARTS AND ASSEMBLIES

PROJECT No 08-07-00
JDW DRAUGHTING SERVICES
J.A.M. DE WAAL. 12 BRIGHTWELL STREET PAPAKURA 2110. NEW ZEALAND. PHONE: 0064 09 2988815. MOB: 0211791000
E-MAIL: dewaal@xtra.co.nz.

PROJECTION JDWDS
DATE JUNE-2015
SHEET: 10 OF 10

MODEL SCALE: 1:1
DWG SCALE: NTS @A3 OR AS SHOWN
Copyright © J.A.M. DE WAAL PAPAKURA NZ
A3 No: JULIAN-10