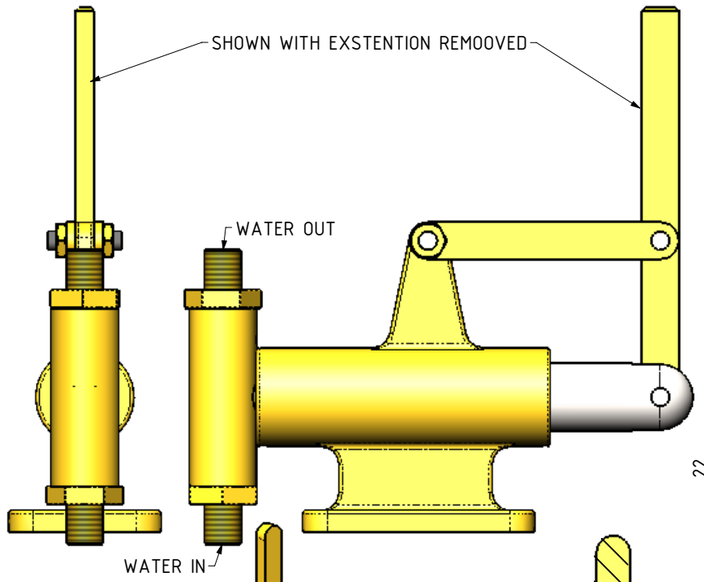

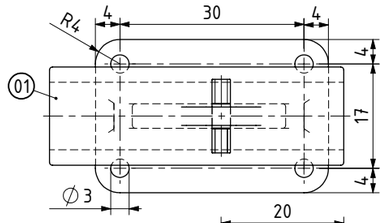

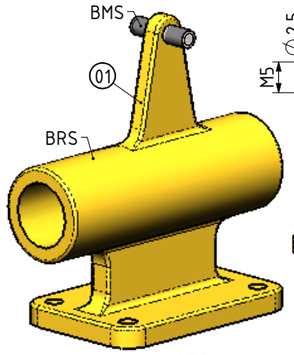

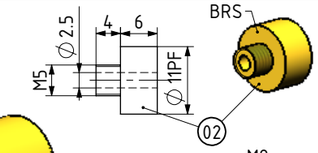

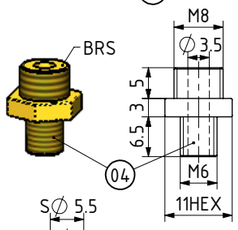

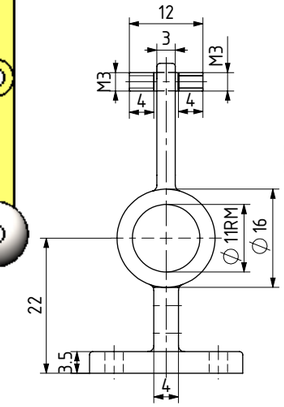

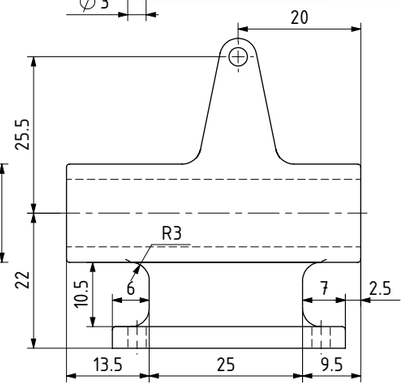

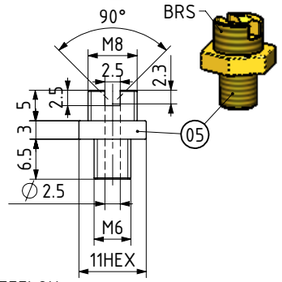

NOTES:

1. ALL ENGINEERING PRACTICES SHALL BE APPLIED WITH REGARDS TO HOLE AND SHAFT TOLERANCES.
2. WHERE SCREWS OR BOLTS ARE USED THE CLEARANCE HOLES SHALL BE APPROXIMATELY 8% TO 10% LARGER THAN THE MATCHING TAPPED HOLE.
3. PREFERABLY ALL TAPPED HOLES TO BE METRIC FINE (MF).
4. MATERIAL SHOWN ON THE DRAWINGS ARE INDCATIVE ONLY, IT IS UP TO THE BUILDER TO USE MATERIALS WHICH WOULD BE THE MOST SUITED.

ABBREVIATIONS:

BRS = BRASS.
BRZ = BONZE OR GUN METAL
BMS = BRIGHT MILD STEEL.
S/S = STAINLESS OF SILVER STEEL.

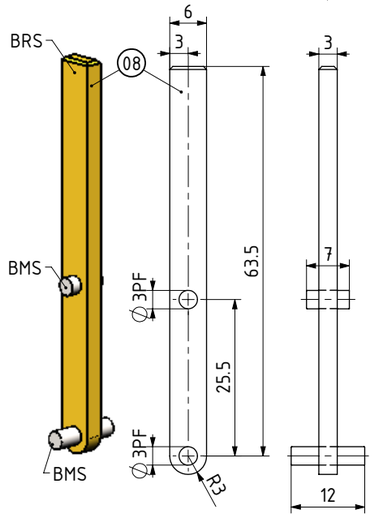

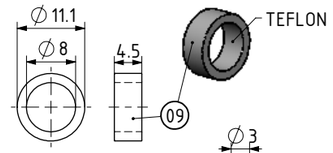

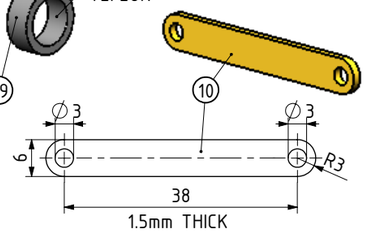

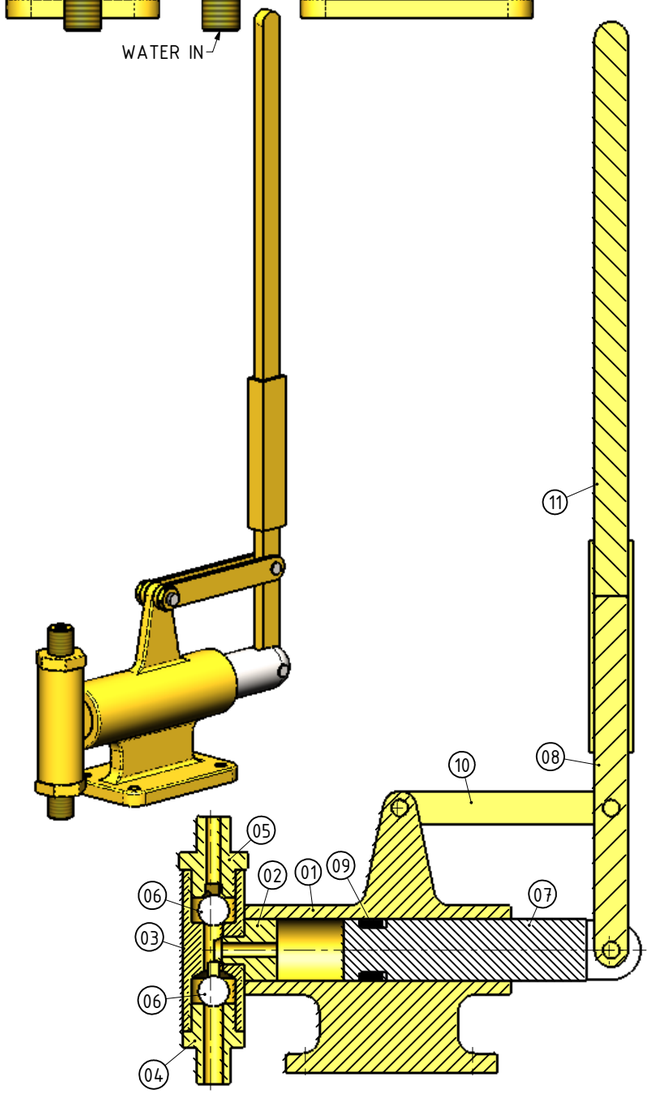

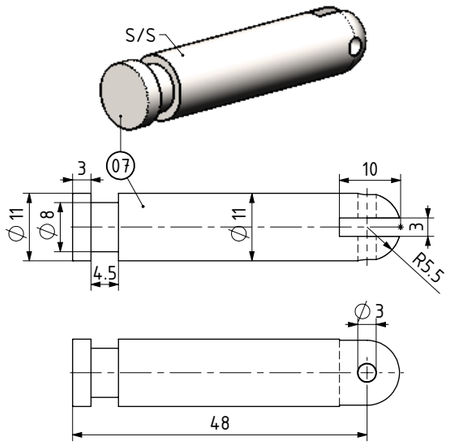

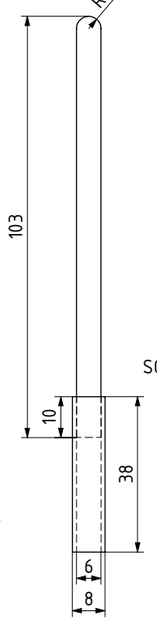

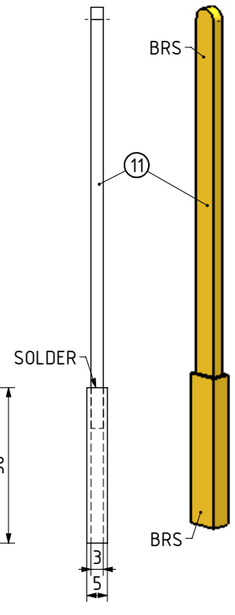

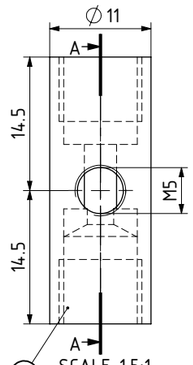

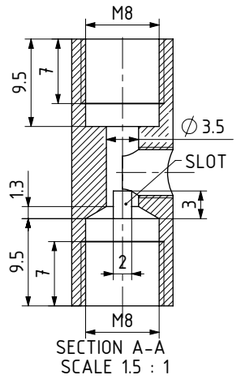

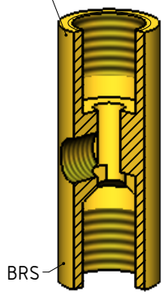

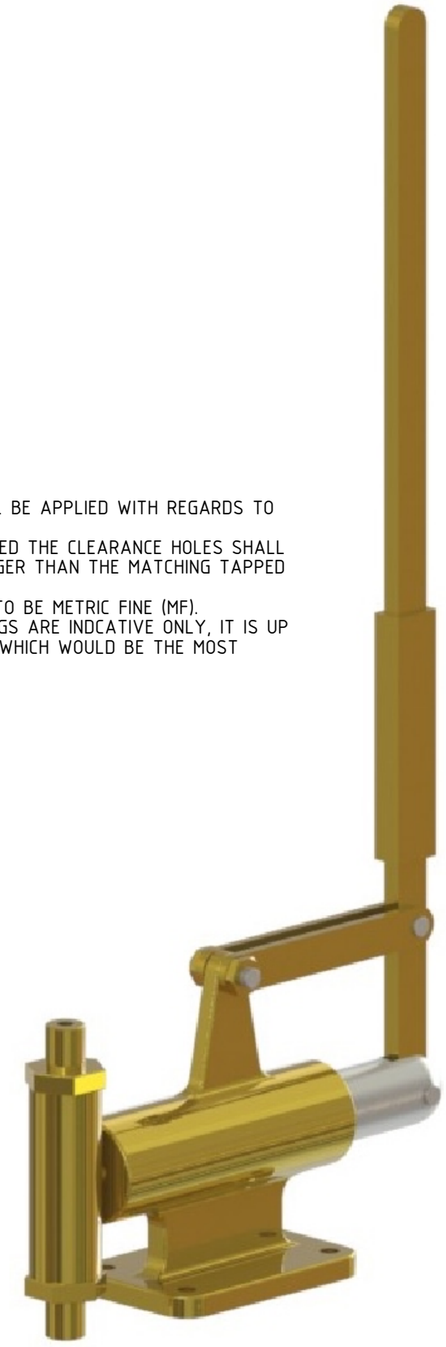

QTY.	PART NUMBER
1	HOFDPP-01-MAIN BODY
1	HOFDPP-02-NOZZLE
1	HOFDPP-03-PUMP BODY
1	HOFDPP-04-PUMP BOTTOM WATER INLET NIPPLE
1	HOFDPP-05-PUMP TOP WATER OUTLET NIPPLE
2	HOFDPP-06-BALL VALVE
1	HOFDPP-07-PISTON
1	HOFDPP-08-PUMP HANDLE
1	HOFDPP-09-PISTON SEAL
2	HOFDPP-10-HANDLE LINK
1	HOFDPP-11-PUMP HANDLE EXSTENTION
2	HOFDPP-M3 NUT

NOTES:

TITLE
HAND OPERATED WATER FEED PUMP/INJECTOR

DRAWING CONTENTS
G.A., BOM, ISOMETRIC VIEW
PARTS AND ASSEMBLIES

PROJECT No
JDW DRAUGHTING SERVICES
J.A.M. DE WAAL. 12 BRIGHTWELL STREET PAPAKURA 2110. NEW ZEALAND. PHONE: 0064 09 2988815. MOB: 0211791000
E-MAIL: dewaal@xtra.co.nz.

PROJECTION
DATE FEBRUARY 2014
SHEET:01 OF 01

MODEL SCALE: 1:1
DWG SCALE: 1:1 @A3 OR AS SHOWN
Copyright © J.A.M. DE WAAL PAPAKURA NZ
A3 No: HOFDPP-01