QTY.	PART NUMBER
1	EVG-P35-01-BASE PLATE
2	EVG-P35-02-ROCKING SHAFT BEARING SUPPORT
1	EVG-P35-03-FLYWHEEL SHAFT BEARING SUPPORT
1	EVG-P35-04-CYLINDER BLOCK
1	EVG-P35-05-CYLINDER FRONT COVER
1	EVG-P35-06-CYLINDER REAR COVER
2	EVG-P35-07-PISTON ROD PACKNUT
1	EVG-P35-08-VALVE CHEST PORT PLATE
1	EVG-P35-09-VALVE CHEST
1	EVG-P35-10-VALVE CHEST COVER
1	EVG-P35-11-VALVE ROD PACKNUT
1	EVG-P35-12-PUMP BASE PLATE
1	EVG-P35-13-PUMP LOWER VALVE BLOCK
1	EVG-P35-14-PUMP CYLINDER BLOCK
1	EVG-P35-15-PUMP UPPER VALVE BLOCK
4	EVG-P35-16-PUMP BALL VALVE
1	EVG-P35-17-PUMP CYLINDER FRONT COVER
1	EVG-P35-18-PUMP CYLINDER REAR COVER
1	EVG-P35-19-PISTON ROD
1	EVG-P35-20-PISTON
1	EVG-P35-21-PUMP PISTON
1	EVG-P35-22-CRANKSHAFT
1	EVG-P35-23-FLYWHEEL
1	EVG-P35-24-ECCENTRIC SHEAVE
1	EVG-P35-25-CRANKARM
1	EVG-P35-26-SLIDE VALVE NUT
1	EVG-P35-27-SLIDE VALVE
1	EVG-P35-28-VALVE SPINDLE
1	EVG-P35-29-VALVE ROCKING CRANKSHAFT
1	EVG-P35-30-ROCKING SHAFT CRANK
1	EVG-P35-31-ECCENTRIC STRAP
1	EVG-P35-32-STEAM IN-OUTLET CONNECTOR
2	EVG-P35-M3 WASHER
1	EVG-P35-M3x4 GRUB SCREW
2	EVG-P35-M3x8 GRUB SCREW
4	EVG-P35-M4 DOME NUT
8	EVG-P35-M4x10 PAN HEAD SCREW
1	EVG-P35-M4x12 GRUB SCREW
12	EVG-P35-M4x14 PAN HEAD SCREW
4	EVG-P35-M4x25 PAN HEAD SCREW
4	EVG-P35-M4x85 TIE ROD
4	EVG-P35-M6x30 C-SINK SCREW

NOTES:
0. ALL DRAWINGS ARE IN METRIC MEASUREMENTS
1. ALL ENGINEERING PRACTICES SHALL BE APPLIED WITH REGARDS TO HOLE AND SHAFT TOLERANCES.
2. WHERE SCREWS OR BOLTS ARE USED THE CLEARANCE HOLES SHALL BE APPROXIMATELY 5% TO 8% LARGER THAN THE MATCHING TAPPED HOLE.
3. PREFERABLY ALL TAPPED HOLES AND MATCHING SCREWS AND/OR BOLTS TO BE METRIC FINE (MF)
4. MATERIALS SPECIFIED ON THE DRAWINGS ARE INDICATIVE ONLY. THE BUILDER CAN MAKE HIS/HER OWN MATERIAL CHOICE.
5. N/A
6. ALL CONNECTIONS/JOINTS WHICH HAVE STEAM PRESSURE APPLIED TO IT SHALL BE SILVER/HARD SOLDERED.
7. COMPRESSION SPRINGS ARE DRAWN IN COMPRESSED STATE (CP), UNCOMPRESSED STATE IS APPROX 40% TO 60% LONGER THEN COMPRESSED STATE.
8. WHERE PREFERRED SCREW OR RIVETED CONNECTIONS CAN BE OMITTED AND PARTS CAN BE BONDED TOGETHER BY USING EITHER HIGH STRENGTH GLUE, EPOXY RESIN, OR SOLDER.
9. PARTS WHICH ARE DIRECTLY EXPOSED TO STEAM AND/OR WATER SHOULD BE CONSTRUCTED USING NON-FERROUS OR NON CORROSIVE MATERIAL SUCH AS BRASS, BRONZE, GUNMETAL, STAINLESS STEEL, COPPER OR MONEL.
10. THE ORDER IN WHICH THE PARTS/COMPONENTS ARE MANUFACTURED AND THE MODEL IS ASSEMBLED IS ENTIRELY LEFT TO THE BUILDER/MODEL MAKER.
11. ERRORS AND/OR OMISSIONS MAY OCCUR IN THE DRAWINGS, DO NOT HESITATE TO CONTACT ME SO THAT THE ERRORS/OMISSIONS CAN BE RECTIFIED.
12. A COLOUR SCHEME FOR THIS PROJECT IS ENTIRELY LEFT UP TO THE MODEL MAKER.
13. THE MANNER IN WHICH THE PARST/COMPONENTS ARE MANUFACTURED IS ENTIRELY LEFT UP TO THE BUILDER.

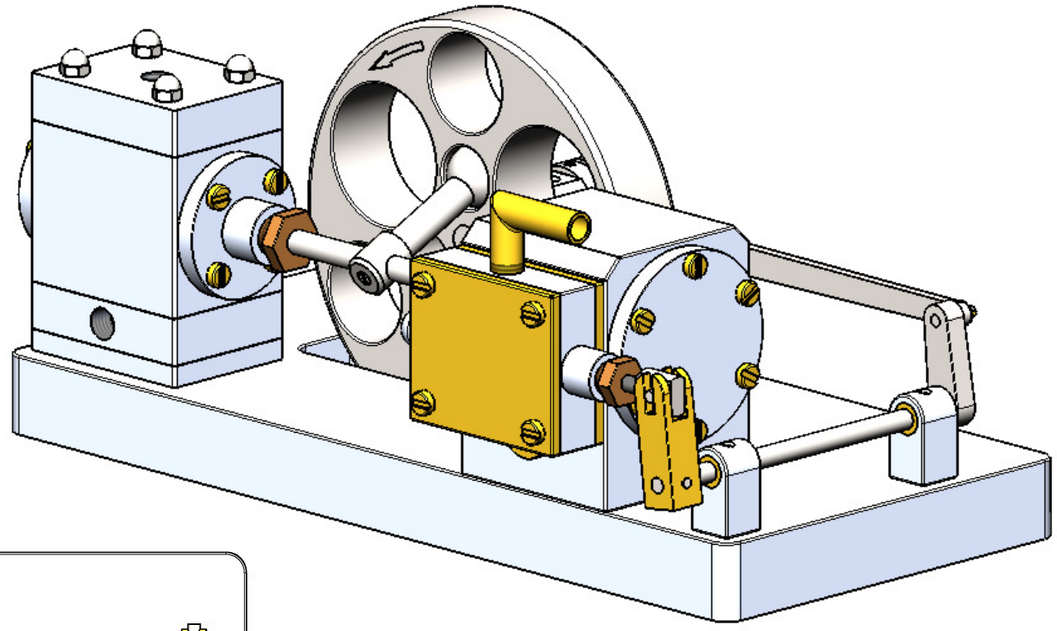

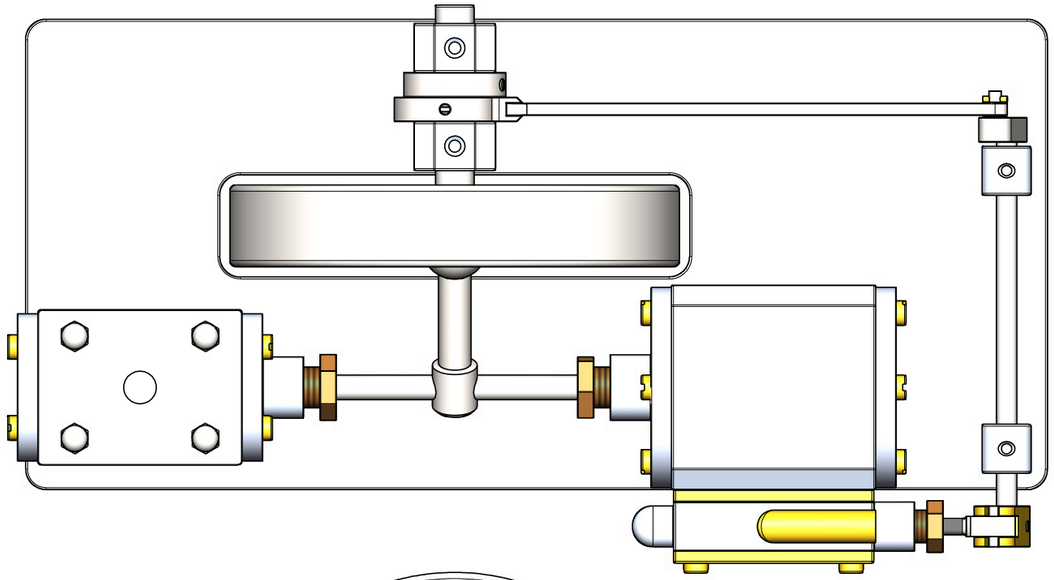

MATERIAL ABBREVIATIONS:
ALU = ALUMINIUM OR DURAL(MIN)
BRS = BRASS
BRZ = BRONZE OR GUNMETAL (BRZ/GM)
CI = CAST IRON
CU = COPPER
GRA = GRAPHITE
MS = MILD STEEL/BRIGHT MILD STEEL
S/S = SILVER STEEL OR STAINLESS STEEL
SPS = SPRING STEEL
PEEK= POLYETHER ETHER KETONE
SYN = SYNTHETIC MATERIAL SUCH AS VETON, NYLON, TEFLON OR RUBBER IN GENERAL SYNTHETIC MATERIALS SOULD BE ABLE TO WITHSTAND THE HEAT AND PRESSURE(S) APPLIED TO THEM.
nnn/nnn MEANS THAT EITHER MATERIAL CAN BE USED

OTHER ABBREVIATIONS
DP = DEEP
PF = PRESS FIT
PCD = PITCH CIRCLE DIAMETER
RM = REAM
HEX = HEXACON, 6SIDED
CP = COMPRESSED
KNL = KNURLED
CSK = COUNTERSINK
PL = PLACES
CF = CLOSE FIT (SIZE FOR SIZE)
DAA= DRILL AFTER ASSEMBLY
PFAA= PRESSFIT AFTER ASSEMBLY
LCT = USE LOCTITE
LPF = LIGHT PRESS FIT
SA-xxx = SUB ASSEMBLY-xxx

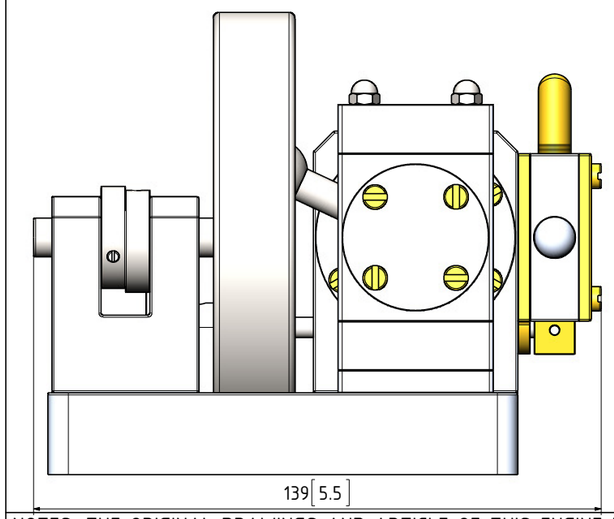

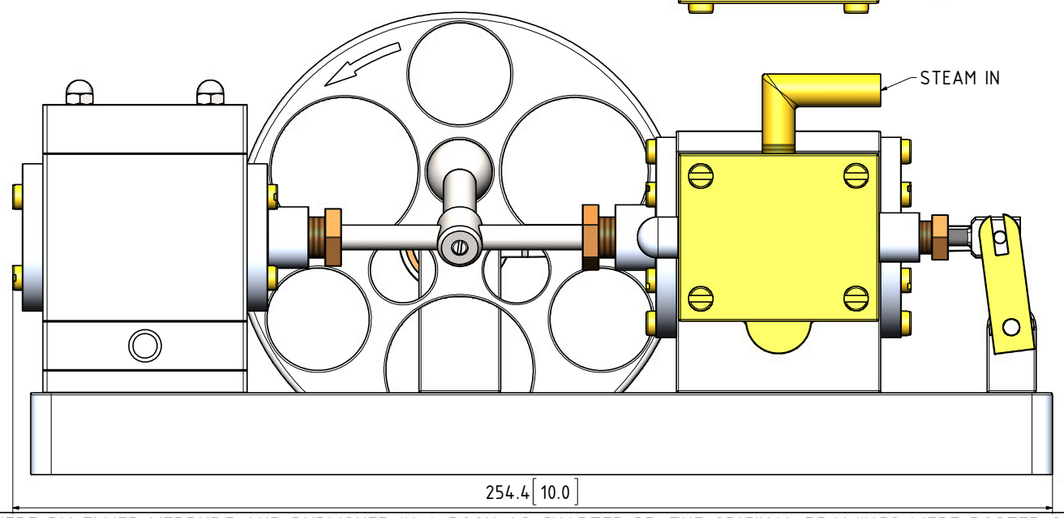

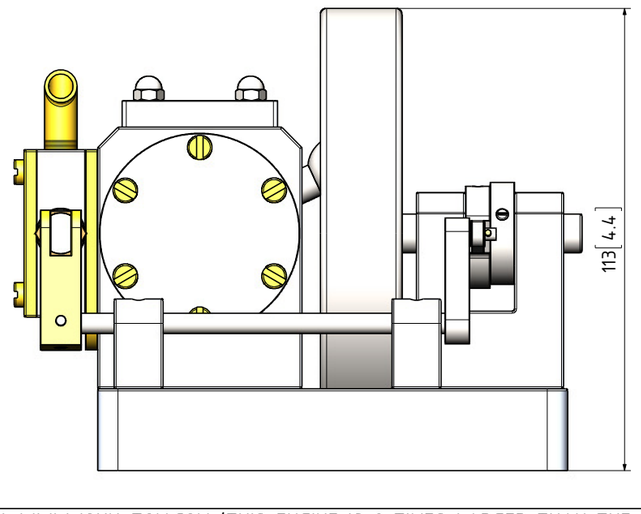

NOTES: THE ORIGINAL DRAWINGS AND ARTICLE OF THIS ENGINE WERE BY ELMER VERBURG AND PUBLISHED IN A BOOK AS CHAPTER 35. THE ORIGINAL DRAWINGS WERE POSTED ON: WWW.JOHN-TOM.COM (THIS ENGINE IS 2 TIMES LARGER THAN THE ORIGINAL)

TITLE 1 CYLINDER HORIZONTAL STEAM ENGINE WITH PUMP (STEAM PUMP)	DRAWING CONTENTS GENERAL ARRANGEMENT, ISOMETRIC VIEW, BOM, NOTES	PROJECT No 10-35-00 JDW DRAUGHTING SERVICES J.A.M. DE WAAL. 12 BRIGHTWELL STREET PAPAKURA 2110. NEW ZEALAND. PHONE: 0064 09 2988815. MOB: 0211791000 E-MAIL: dewaal@xtra.co.nz.	PROJECTION JDWDS DATE MARCH-2016 SHEET: 01 OF 03
			MODEL SCALE: 1:1 DWG SCALE: 1:1 @A3 OR AS SHOWN Copyright © J.A.M. DE WAAL PAPAKURA NZ A3 No: EVG-P35-01

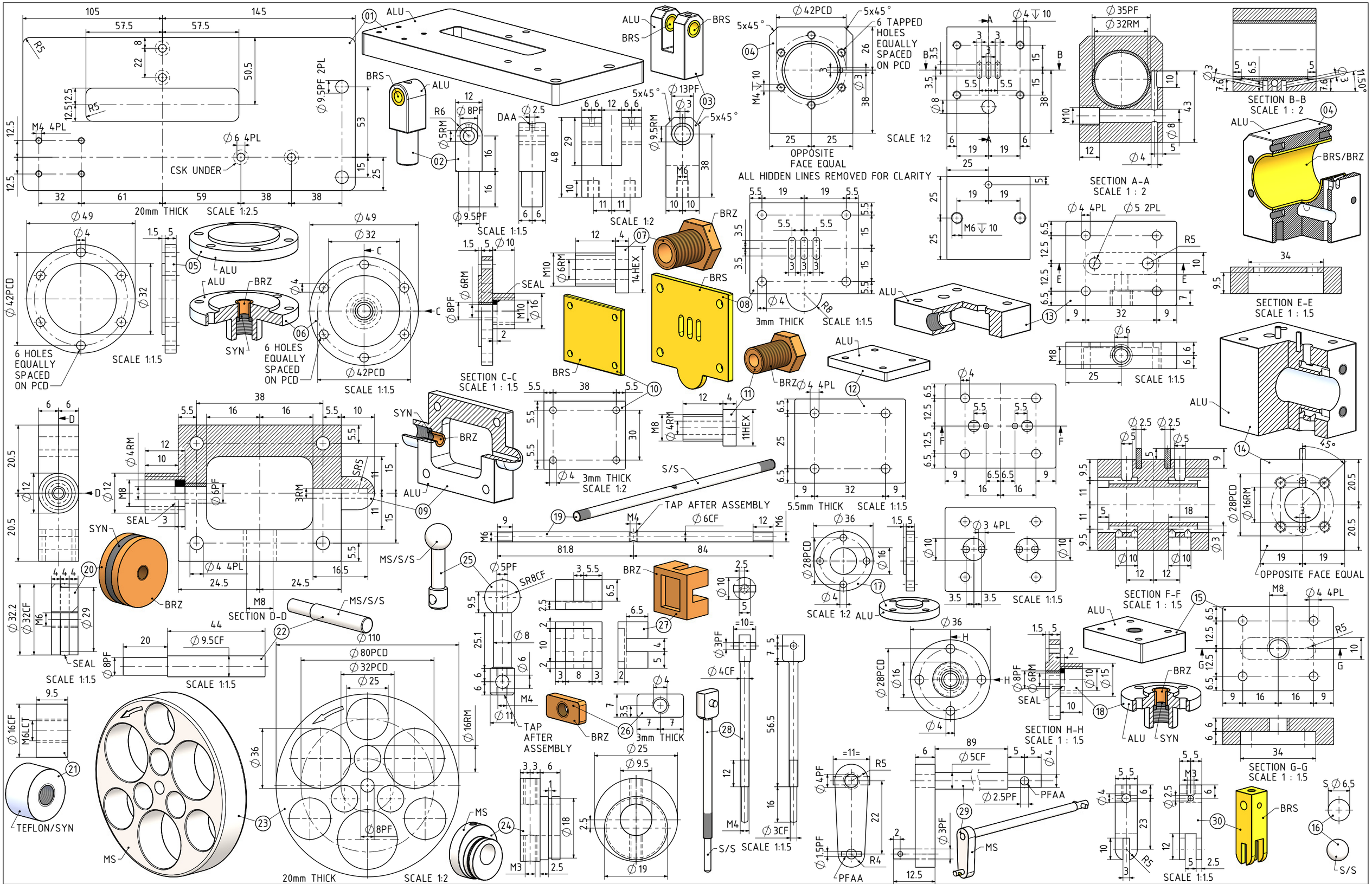

NOTES: THE ORIGINAL DRAWINGS AND ARTICLE OF THIS ENGINE WERE BY ELMER VERBURG AND PUBLISHED IN A BOOK AS CHAPTER 35. THE ORIGINAL DRAWINGS WERE POSTED ON: WWW.JOHN-TOM.COM (THIS ENGINE IS 2 TIMES LARGER THAN THE ORIGINAL)

TITLE 1 CYLINDER HORIZONTAL STEAM ENGINE WITH PUMP (STEAM PUMP)	DRAWING CONTENTS PARTS AND ASSEMBLIES	PROJECT No 10-35-00	MODEL SCALE: 1:1
		JDW DRAUGHTING SERVICES	DWG SCALE: 1:1 @A3 OR AS SHOWN
		J.A.M. DE WAAL, 12 BRIGHTWELL STREET PAPAKURA 2110, NEW ZEALAND. PHONE: 0064 09 2988815. MOB: 0211791000 E-MAIL: dewaal@xtra.co.nz.	PROJECTION JDWDS
		DATE MARCH-2016	Copyright © J.A.M. DE WAAL PAPAKURA NZ
		SHEET: 02 OF 03	A3 No: EVG-P35-02

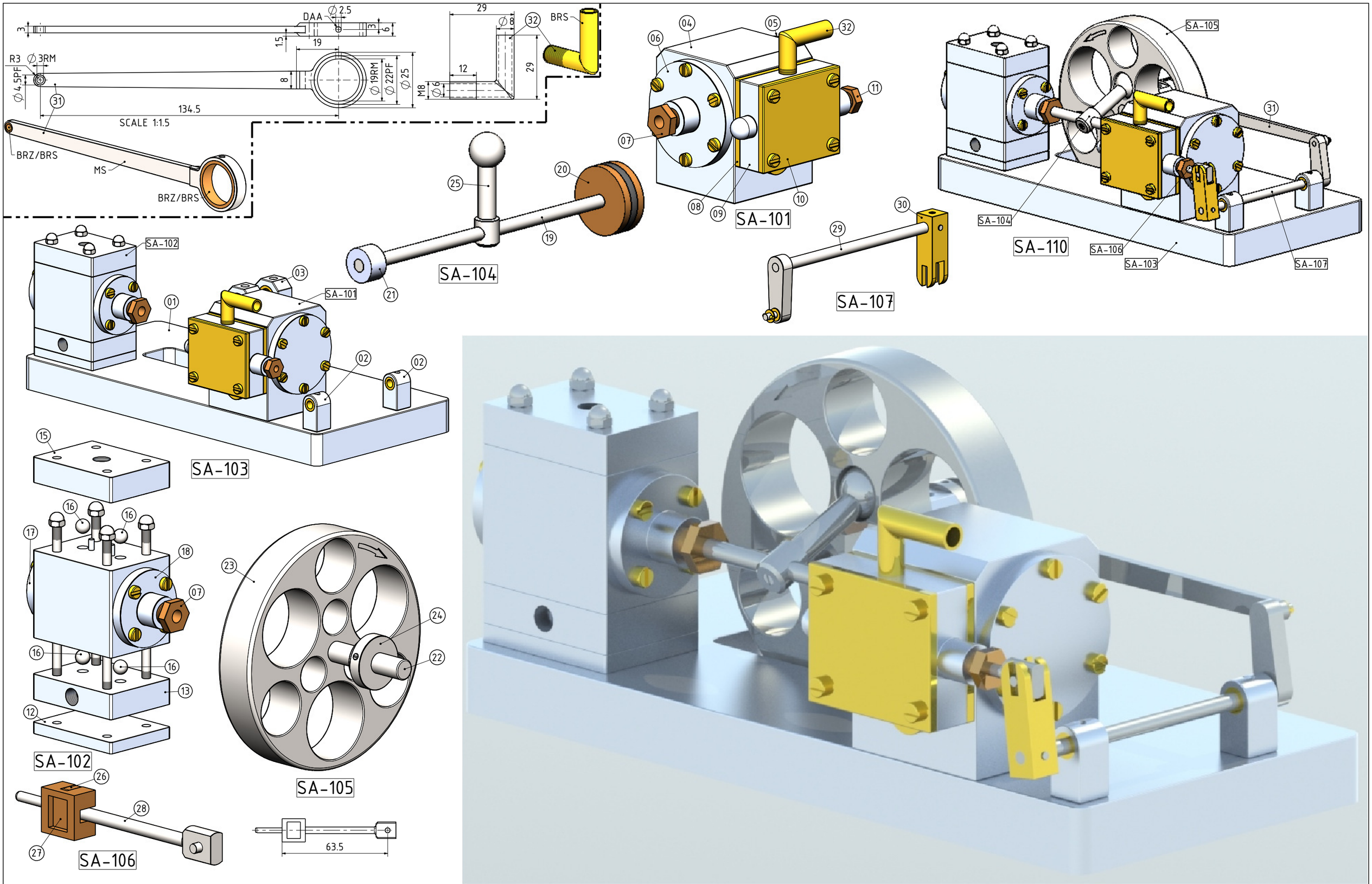

NOTES: THE ORIGINAL DRAWINGS AND ARTICLE OF THIS ENGINE WERE BY ELMER VERBURG AND PUBLISHED IN A BOOK AS CHAPTER 35. THE ORIGINAL DRAWINGS WERE POSTED ON: WWW.JOHN-TOM.COM (THIS ENGINE IS 2 TIMES LARGER THAN THE ORIGINAL)

TITLE 1 CYLINDER HORIZONTAL STEAM ENGINE WITH PUMP (STEAM PUMP)	DRAWING CONTENTS PARTS AND ASSEMBLIES	PROJECT No 10-35-00 JDW DRAUGHTING SERVICES J.A.M. DE WAAL. 12 BRIGHTWELL STREET PAPAKURA 2110. NEW ZEALAND. PHONE: 0064 09 2988815. MOB: 0211791000 E-MAIL: dewaal@xtra.co.nz.	PROJECTION JDWDS DATE MARCH-2016 SHEET: 02 OF 03	MODEL SCALE: 1:1 DWG SCALE: 1:1 @A3 OR AS SHOWN Copyright © J.A.M. DE WAAL PAPAKURA NZ A3 No: EVG-P35-03