MATERIAL ABBREVIATIONS:
ALU = ALUMINIUM OR DURAL(MIN)
BRS = BRASS
BRZ = BRONZE OR GUNMETAL (BRZ/GM)
CI = CAST IRON
CU = COPPER
GRA = GRAPHITE
MS = MILD STEEL/BRIGHT MILD STEEL
S/S = SILVER STEEL OR STAINLESS STEEL
SPS = SPRING STEEL
PEEK= POLYETHER ETHER KETONE
SYN = SYNTHETIC MATERIAL SUCH AS VETON, NYLON, TEFLON OR RUBBER IN GENERAL SYNTHETIC MATERIALS SOULD BE ABLE TO WITHSTAND THE HEAT AND PRESSURE(S) APPLIED TO THEM.
nnn/nnn MEANS THAT EITHER MATERIAL CAN BE USED

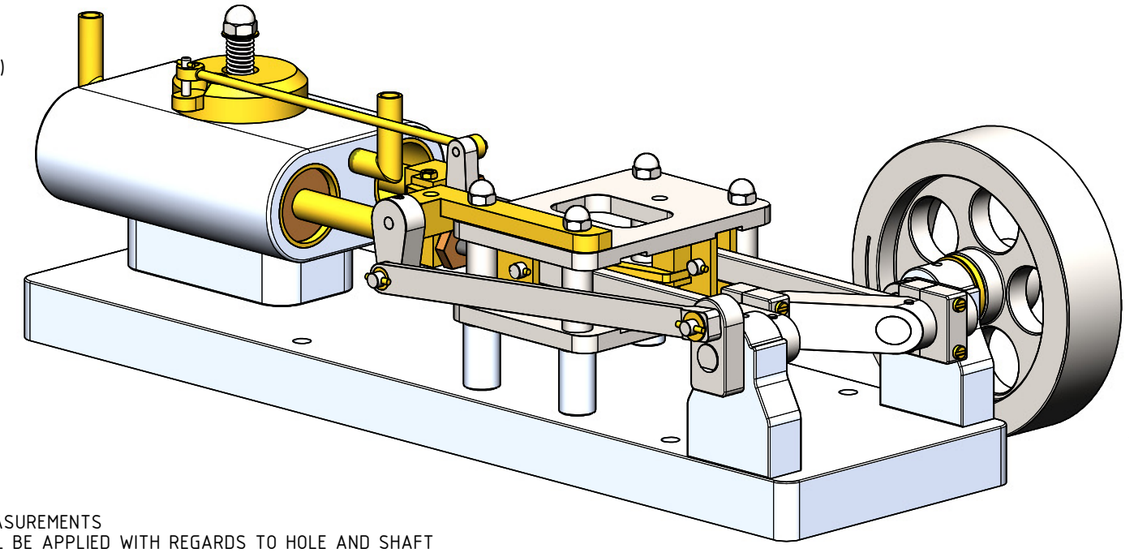

QTY.	PART NUMBER
2	EVG-P34-23-CROSSHEAD PIN
2	EVG-P34-24-PISTON TYPE-2
2	EVG-P34-25-PISTON TYPE-2 TUBE ROD
2	EVG-P34-26-CROSSHEAD STUFFING BOX
2	EVG-P34-27A-CROSSHEAD STUFFING BOX PACKNUT
2	EVG-P34-27B-CROSSHEAD STUFFING BOX SEAL
2	EVG-P34-28-CROSSHEAD CROSS LINK PLATE
1	EVG-P34-29-VALVE
1	EVG-P34-30-VALVE PIVOT SPINDLE
1	EVG-P34-31-CRANKSHAFT VALVE CRANK
1	EVG-P34-32-ROCKING SHAFT
1	EVG-P34-33-ROCKING SHAFT CRANK
1	EVG-P34-34-ROCKER CON-ROD
1	EVG-P34-35-VALVE LINK
1	EVG-P34-36-VALVE DISC SPRING
4	EVG-P34-M3 NUT
1	EVG-P34-M3x6 GRUB SCREW
4	EVG-P34-M3x16 PAN HEAD SCREW
4	EVG-P34-M3x23 PAN HEAD SCREW
1	EVG-P34-M4x8.5 GRUB SCREW
4	EVG-P34-M5 DOME NUT
2	EVG-P34-M5 WASHER
4	EVG-P34-M5x28 C-SINK SCREW
1	EVG-P34-M6 DOME NUT
1	EVG-P34-M6 WASHER
2	EVG-P34-M6x53 C-SINK SCREW

QTY.	PART NUMBER
1	EVG-P34-01-BASE PLATE
1	EVG-P34-02-CYLINDER STAND
2	EVG-P34-03-MAIN BEARING STAND
1	EVG-P34-04-CYLINDER BLOCK
1	EVG-P34-05-PORT DISC
4	EVG-P34-06-CROSSHEAD SPACER
1	EVG-P34-07-CROSSHEAD GUIDE
1	EVG-P34-07-CROSSHEAD GUIDE
2	EVG-P34-08-CROSSHEAD GUIDE MOUNTING STUD-1
2	EVG-P34-08-CROSSHEAD GUIDE MOUNTING STUD-2
1	EVG-P34-09-ROCKER SHAFT BEARING BRACKET
2	EVG-P34-10-STEAM IN-OUTLET CONNECTOR
1	EVG-P34-11-CRANKSHAFT PART-1
1	EVG-P34-12-CRANKSHAFT PART-2
2	EVG-P34-13-CRANK CHEEK TYPE-1
1	EVG-P34-14-CRANK CHEEK TYPE-2
2	EVG-P34-15-CRANK PIN
1	EVG-P34-16-FLYWHEEL SPACER
1	EVG-P34-17-FLYWHEEL
1	EVG-P34-18-FLYWHEEL CRANKSHAFT FASTENER
2	EVG-P34-19-PISTON TYPE-1
2	EVG-P34-20-PISTON TYPE-1 ROD
2	EVG-P34-21- CROSSHEAD
2	EVG-P34-22-CON-ROD

NOTES:
0. ALL DRAWINGS ARE IN METRIC MEASUREMENTS
1. ALL ENGINEERING PRACTICES SHALL BE APPLIED WITH REGARDS TO HOLE AND SHAFT TOLERANCES.
2. WHERE SCREWS OR BOLTS ARE USED THE CLEARANCE HOLES SHALL BE APPROXIMATELY 5% TO 8% LARGER THAN THE MATCHING TAPPED HOLE.
3. PREFERABLY ALL TAPPED HOLES AND MATCHING SCREWS AND/OR BOLTS TO BE METRIC FINE (MF)
4. MATERIALS SPECIFIED ON THE DRAWINGS ARE INDICATIVE ONLY. THE BUILDER CAN MAKE HIS/HER OWN MATERIAL CHOICE.
5. N/A
6. ALL CONNECTIONS/JOINTS WHICH HAVE STEAM PRESSURE APPLIED TO IT SHALL BE SILVER/HARD SOLDERED.
7. COMPRESSION SPRINGS ARE DRAWN IN COMPRESSED STATE (CP), UNCOMPRESSED STATE IS APPROX 40% TO 60% LONGER THEN COMPRESSED STATE.
8. WHERE PREFERRED SCREW OR RIVETED CONNECTIONS CAN BE OMITTED AND PARTS CAN BE BONDED TOGETHER BY USING EITHER HIGH STRENGTH GLUE, EPOXY RESIN, OR SOLDER.
9. PARTS WHICH ARE DIRECTLY EXPOSED TO STEAM AND/OR WATER SHOULD BE CONSTRUCTED USING NON-FERROUS OR NON CORROSIVE MATERIAL SUCH AS BRASS, BRONZE, GUNMETAL, STAINLESS STEEL, COPPER OR MONEL.
10. THE ORDER IN WHICH THE PARTS/COMPONENTS ARE MANUFACTURED AND THE MODEL IS ASSEMBLED IS ENTIRELY LEFT TO THE BUILDER/MODEL MAKER.
11. ERRORS AND/OR OMISSIONS MAY OCCUR IN THE DRAWINGS, DO NOT HESITATE TO CONTACT ME SO THAT THE ERRORS/OMISSIONS CAN BE RECTIFIED.
12. A COLOUR SCHEME FOR THIS PROJECT IS ENTIRELY LEFT UP TO THE MODEL MAKER.
13. THE MANNER IN WHICH THE PARST/COMPONENTS ARE MANUFACTURED IS ENTIRELY LEFT UP TO THE BUILDER.

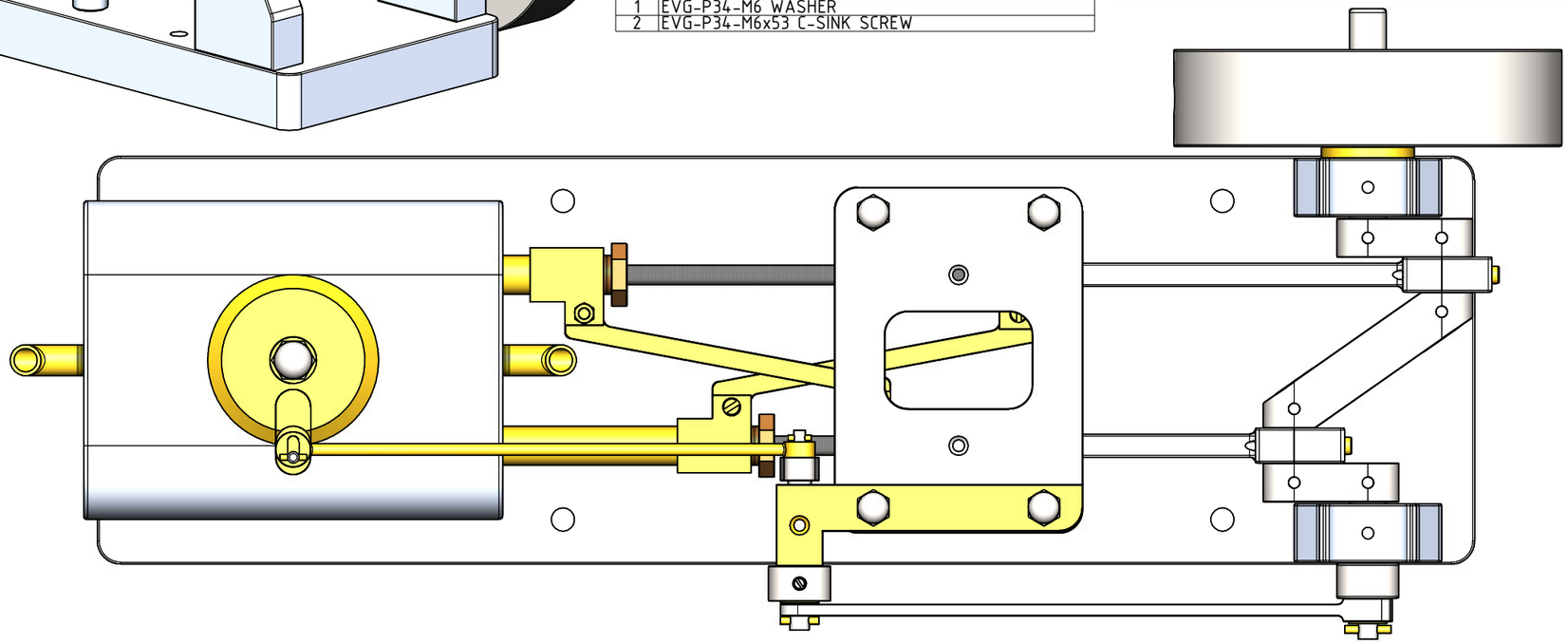

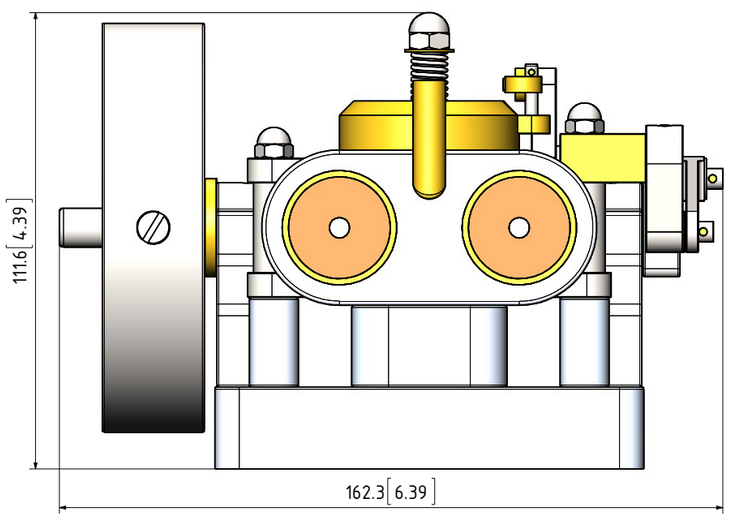

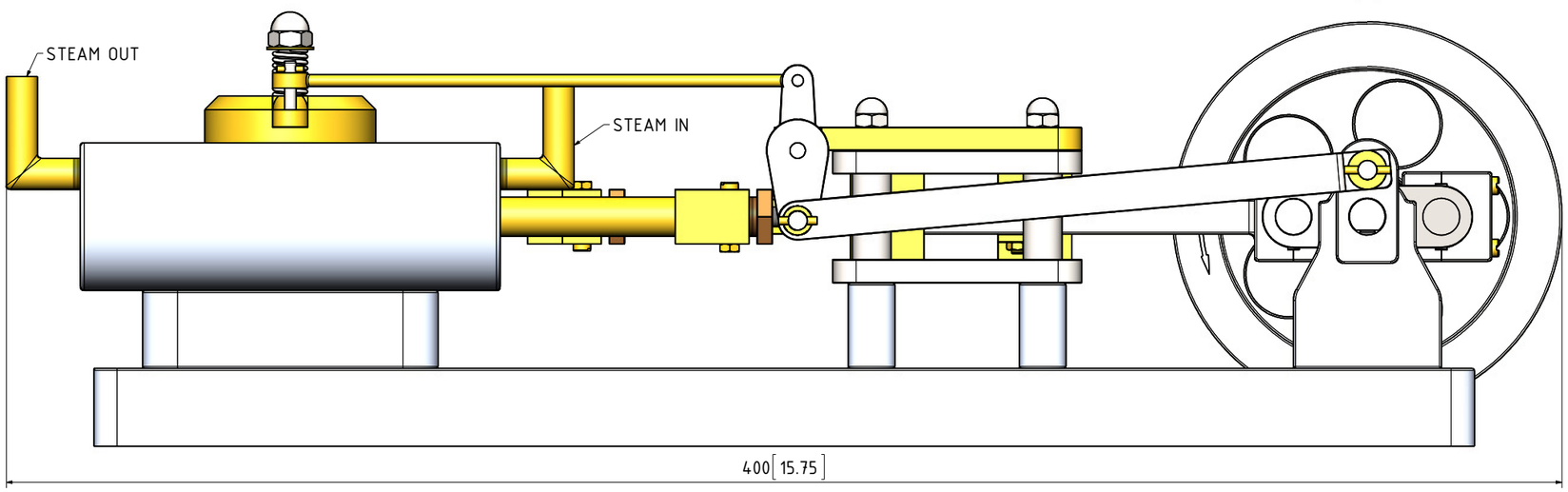

NOTES: THE ORIGINAL DRAWINGS AND ARTICLE OF THIS ENGINE WERE BY ELMER VERBURG AND PUBLISHED IN A BOOK AS CHAPTER 34. THE ORIGINAL DRAWINGS WERE POSTED ON: WWW.JOHN-TOM.COM (THIS ENGINE IS 2 TIMES LARGER THAN THE ORIGINAL)

TITLE 2 CYL. HORIZONTAL STEAM ENGINE WITH 4 OPPOSING PISTONS (CROSS TWIN)	DRAWING CONTENTS GENERAL ARRANGEMENT, ISOMETRIC VIEW, BOM AND NOTES	PROJECT No 10-34-00 JDW DRAUGHTING SERVICES J.A.M. DE WAAL. 12 BRIGHTWELL STREET PAPAKURA 2110. NEW ZEALAND. PHONE: 0064 09 2988815. MOB: 0211791000 E-MAIL: dewaal@xtra.co.nz.	PROJECTION JDWDS DATE MARCH-2016 SHEET: 01 OF 03
			MODEL SCALE: 1:1 DWG SCALE: 1:1 @A3 OR AS SHOWN Copyright © J.A.M. DE WAAL PAPAKURA NZ A3 No: EVG-P34-01

OTHER ABBREVIATIONS
DP = DEEP
PF = PRESS FIT
PCD = PITCH CIRCLE DIAMETER
RM = REAM
HEX = HEXACON, 6SIDED
CP = COMPRESSED
KNL = KNURLED
CSK = COUNTERSINK
PL = PLACES
CF = CLOSE FIT (SIZE FOR SIZE)
DAA= DRILL AFTER ASSEMBLY
PFAA= PRESSFIT AFTER ASSEMBLY
LCT = USE LOCTITE
LPF = LIGHT PRESS FIT
SA-xxx = SUB ASSEMBLY-xxx

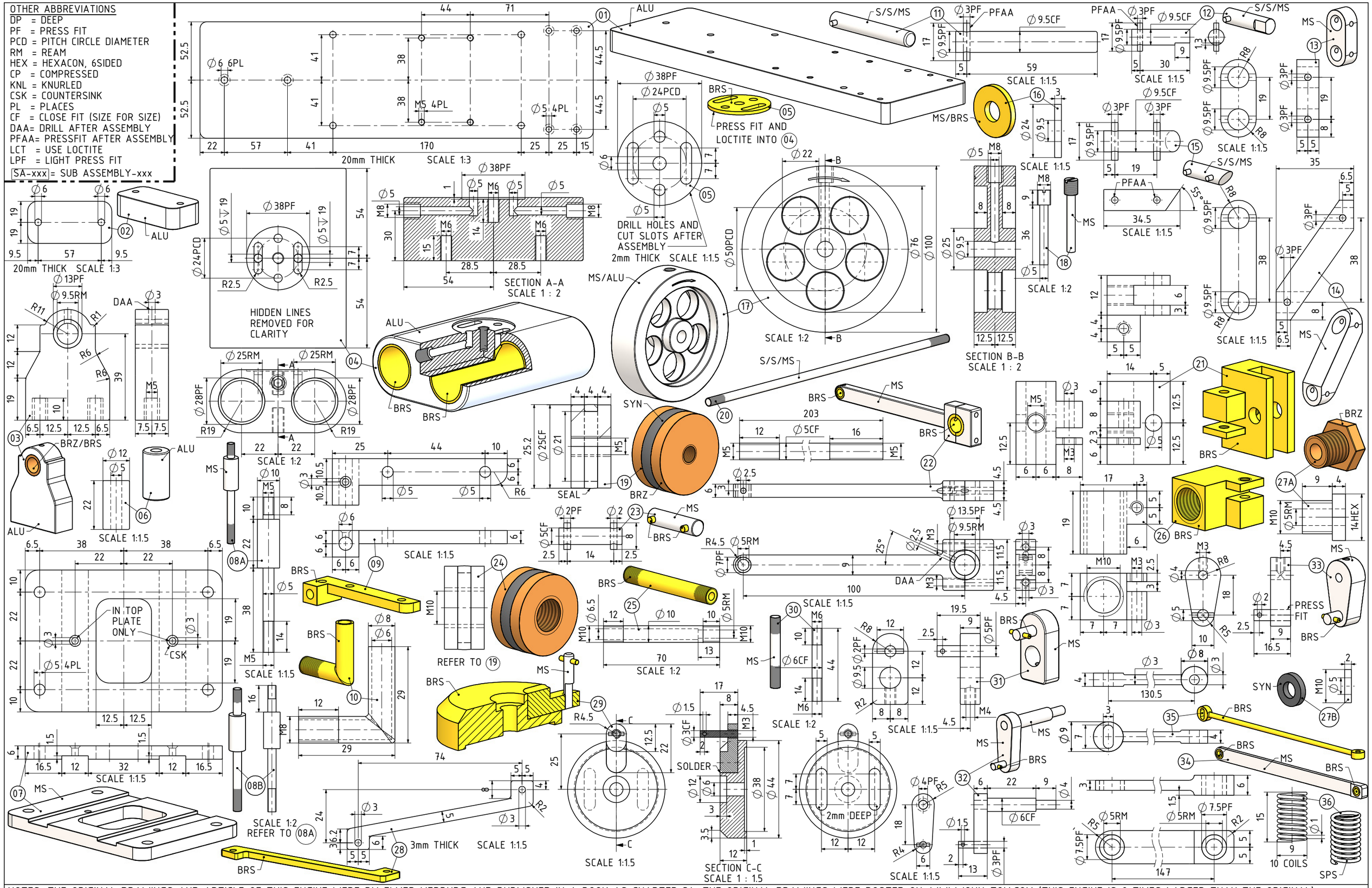

NOTES: THE ORIGINAL DRAWINGS AND ARTICLE OF THIS ENGINE WERE BY ELMER VERBURG AND PUBLISHED IN A BOOK AS CHAPTER 34. THE ORIGINAL DRAWINGS WERE POSTED ON: WWW.JOHN-TOM.COM (THIS ENGINE IS 2 TIMES LARGER THAN THE ORIGINAL)

TITLE 2 CYL. HORIZONTAL STEAM ENGINE WITH 4 OPPOSING PISTONS (CROSS TWIN)	DRAWING CONTENTS PARTS AND ASSEMBLIES	PROJECT No 10-34-00 JDW DRAUGHTING SERVICES J.A.M. DE WAAL. 12 BRIGHTWELL STREET PAPAKURA 2110. NEW ZEALAND. PHONE: 0064 09 2988815. MOB: 0211791000 E-MAIL: dewaal@xtra.co.nz.	PROJECTION JDWDS DATE MARCH-2016 SHEET: 02 OF 03
			MODEL SCALE: 1:1 DWG SCALE: 1:1 @A3 OR AS SHOWN Copyright © J.A.M. DE WAAL PAPAKURA NZ A3 No: EVG-P34-02

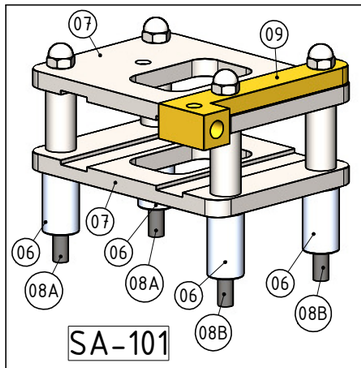

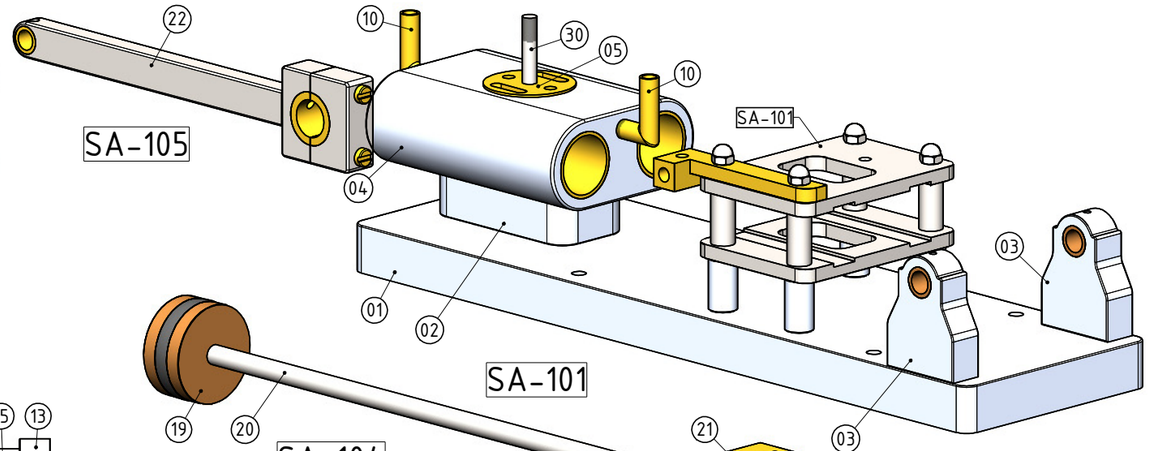

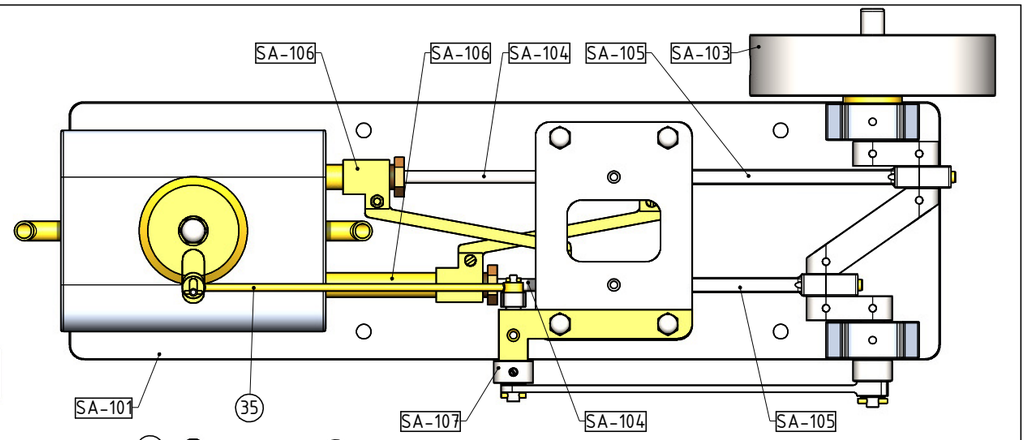

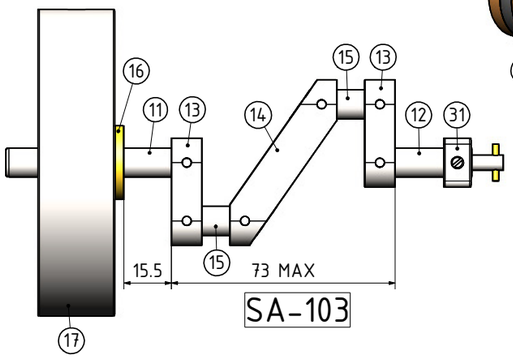

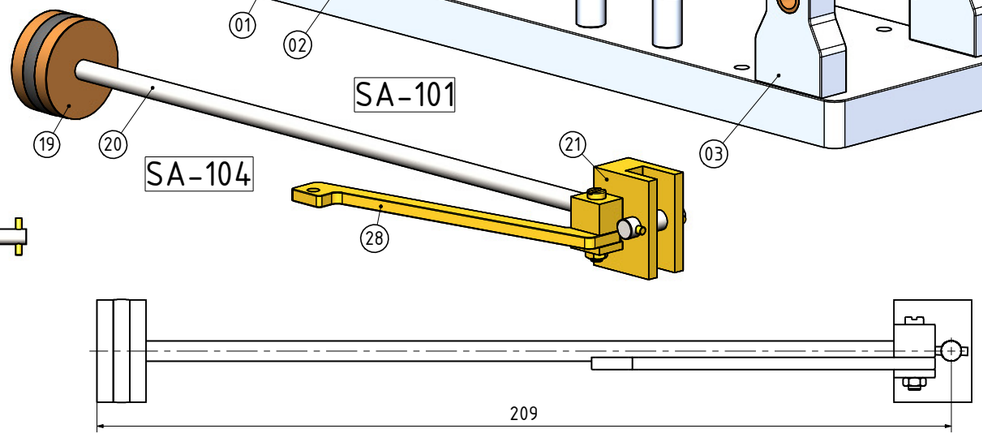

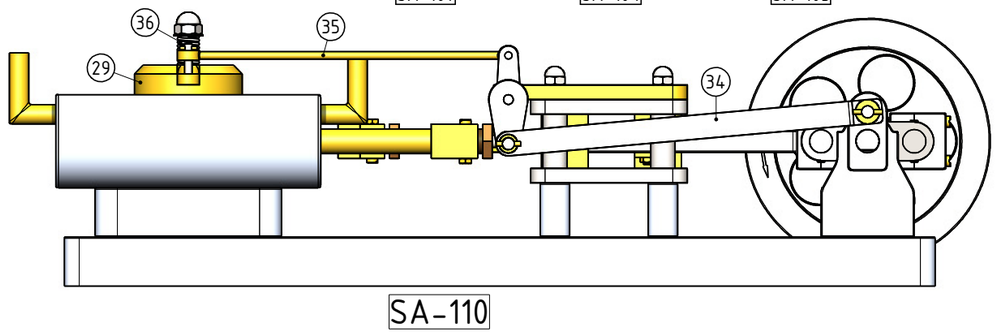

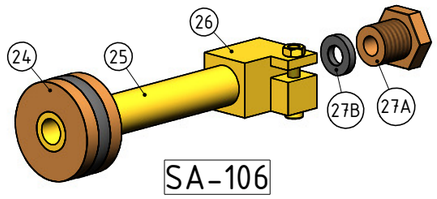

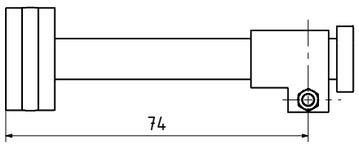

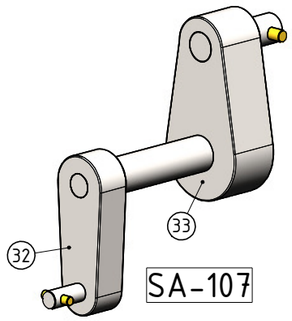

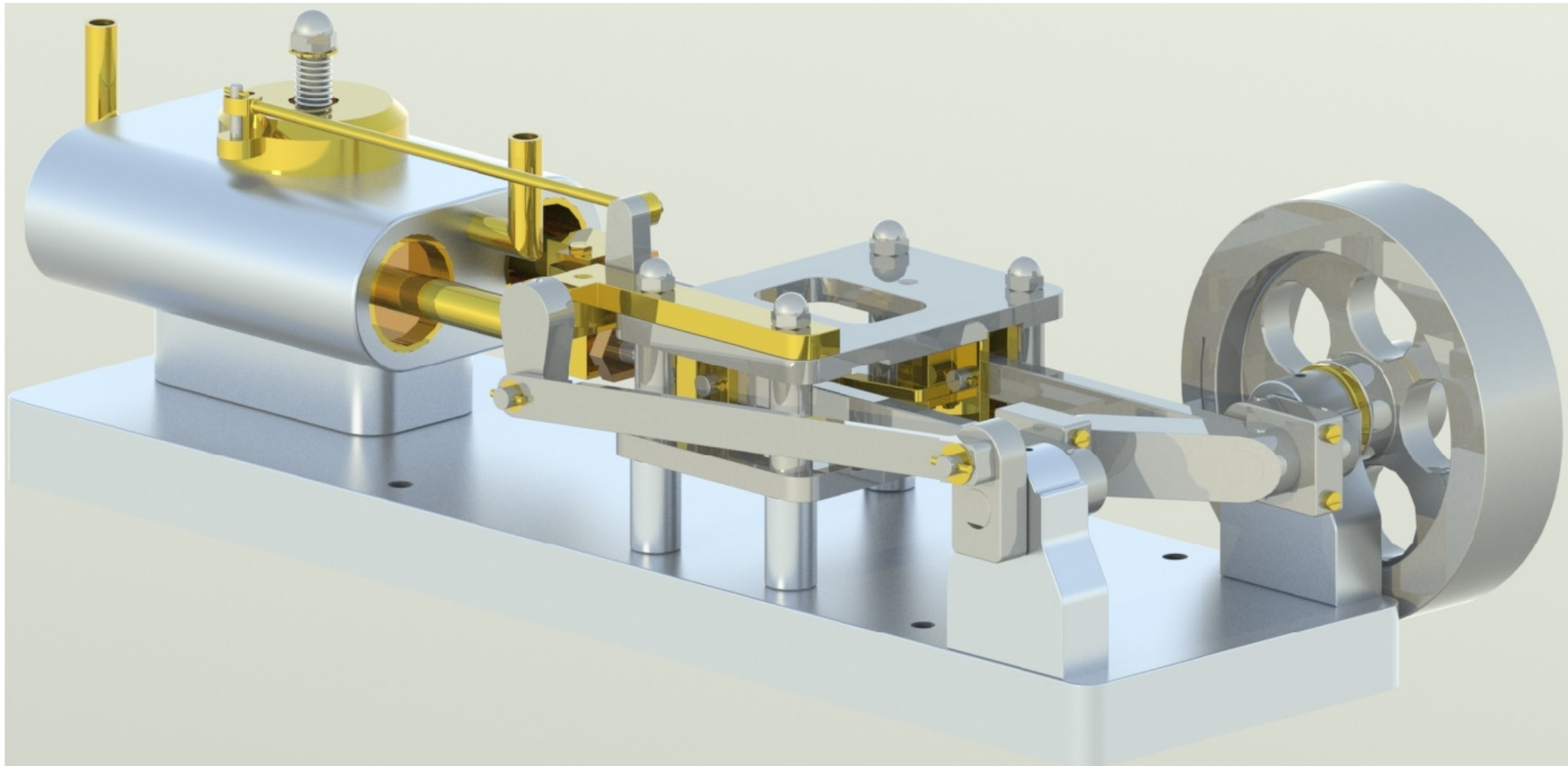

NOTES: THE ORIGINAL DRAWINGS AND ARTICLE OF THIS ENGINE WERE BY ELMER VERBURG AND PUBLISHED IN A BOOK AS CHAPTER 34. THE ORIGINAL DRAWINGS WERE POSTED ON: WWW.JOHN-TOM.COM (THIS ENGINE IS 2 TIMES LARGER THAN THE ORIGINAL)

TITLE 2 CYL. HORIZONTAL STEAM ENGINE WITH 4 OPPOSING PISTONS (CROSS TWIN)	DRAWING CONTENTS PARTS AND ASSEMBLIES	PROJECT No 10-34-00 JDW DRAUGHTING SERVICES J.A.M. DE WAAL, 12 BRIGHTWELL STREET PAPAKURA 2110, NEW ZEALAND. PHONE: 0064 09 2988815. MOB: 0211791000 E-MAIL: dewaal@xtra.co.nz.	PROJECTION JDWDS DATE MARCH-2016 SHEET: 03 OF 03	MODEL SCALE: 1:1 DWG SCALE: 1:1 @A3 OR AS SHOWN Copyright © J.A.M. DE WAAL PAPAKURA NZ A3 No: EVG-P34-03